AUTOMATIC TRANSMISSION

CONTENTS

SERVICE SPECIFICATIONS 2

LUBRICANTS 2

SPECIAL TOOLS 2

TROUBLESHOOTING
<A/T> 3
<SS4 II> 70
<Shift Lock and Key Interlock Mechanisms> 92

ON-VEHICLE SERVICE 94
- Basic Adjustment Procedures 94
- Transfer Oil Check 99
- Transfer Oil Change 99
- Location of Control Components 101
- Control Component Checks 102
- Torque Converter Stall Test 105
- Fluid Pressure Test 106
- Hydraulic Circuit 110
- Line Pressure Adjustment 111
- Selector Lever Operation Check 111
- Transfer Shift Lever Operation Check 114
- Transmission Control Cable Adjustment 114
- Transfer-ECU Check 115
- Position Indicator Lamp Check 115

TRANSMISSION CONTROL* 116

SHIFT LOCK AND KEY INTERLOCK MECHANISMS* 120

TRANSMISSION ASSEMBLY 122

TRANSMISSION OIL COOLER 127

A/T-ECU 129

TRANSFER-ECU 130

WARNING REGARDING SERVICING OF SUPPLEMENTAL RESTRAINT SYSTEM (SRS) EQUIPPED VEHICLES

WARNING!

(1) Improper service or maintenance of any component of the SRS, or any SRS-related component, can lead to personal injury or death to service personnel (from inadvertent firing of the air bag) or to driver and passenger (from rendering the SRS inoperative).

(2) Service or maintenance of any SRS component or SRS-related component must be performed only at an authorized MITSUBISHI dealer.

(3) MITSUBISHI dealer personnel must thoroughly review this manual, and especially its GROUP 52B - Supplemental Restraint System (SRS) before beginning any service or maintenance of any component of the SRS or any SRS-related component.

NOTE

The SRS includes the following components: SRS-ECU, SRS warning lamp, air bag module, clock spring, and interconnecting wiring. Other SRS-related components (that may have to be removed/installed in connection with SRS service or maintenance) are indicated in the table of contents by an asterisk (*).

SERVICE SPECIFICATIONS

Item		Standard value
A/T fluid temperature sensor resistance kΩ	At 0°C	16.7 - 20.5
	At 20°C	7.3 - 8.9
	At 40°C	3.4 - 4.2
	At 60°C	1.9 - 2.2
	At 80°C	1.0 - 1.2
	At 100°C	0.57 - 0.69
Damper clutch control (DCC) solenoid valve coil resistance (at 20°C) Ω		2.7 - 3.4
Low & reverse (LR) solenoid valve coil resistance (at 20°C) Ω		2.7 - 3.4
Second (2ND) solenoid valve coil resistance (at 20°C) Ω		2.7 - 3.4
Underdrive solenoid valve (UD solenoid valve) coil resistance (at 20°C) Ω		2.7 - 3.4
Overdrive solenoid valve (OD solenoid valve) coil resistance (at 20°C) Ω		2.7 - 3.4
Resistance of reduction (RED) solenoid valve coil at (20°C) Ω		2.7 - 3.4
Stall speed r/min	6G7	2,200 - 2,700
	4M4	2,400 - 2,900
Line pressure adjustment value kPa		1,010 - 1,050

LUBRICANTS

Item	Brand	Quantity L
Transmission fluid	DIA QUEEN ATF SP II M, ATF SP III or equivalent	9.3
Transfer oil	Hypoid gear oil SAE 75W-90 or 75W-85W conforming to API GL-4	2.8

SPECIAL TOOLS

Tools	No.	Name	Application
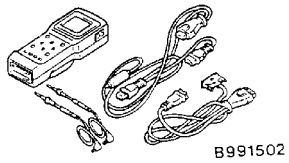	MB991502	MUT-II Sub assembly	Diagnosis code checking
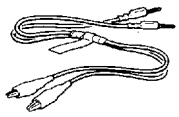	MB991529	Diagnosis code checking harness	
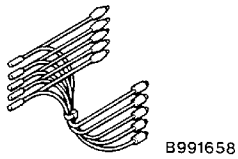	MB991658	Test harness	Voltage measurement of APS
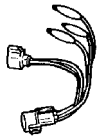	MD998478	Test harness (3P, triangle)	Voltage measurement of crank angle sensor

Tools	No.	Name	Application
	MD998330 (including MD998331)	Oil pressure gauge (2,942 kPa)	Hydraulic pressure measurement
	MD998332	Adapter	Oil pressure gauge connection
	MD998900	Adapter	

TROUBLESHOOTING <A/T>

BASIC FLOW OF PROBLEM DIAGNOSIS

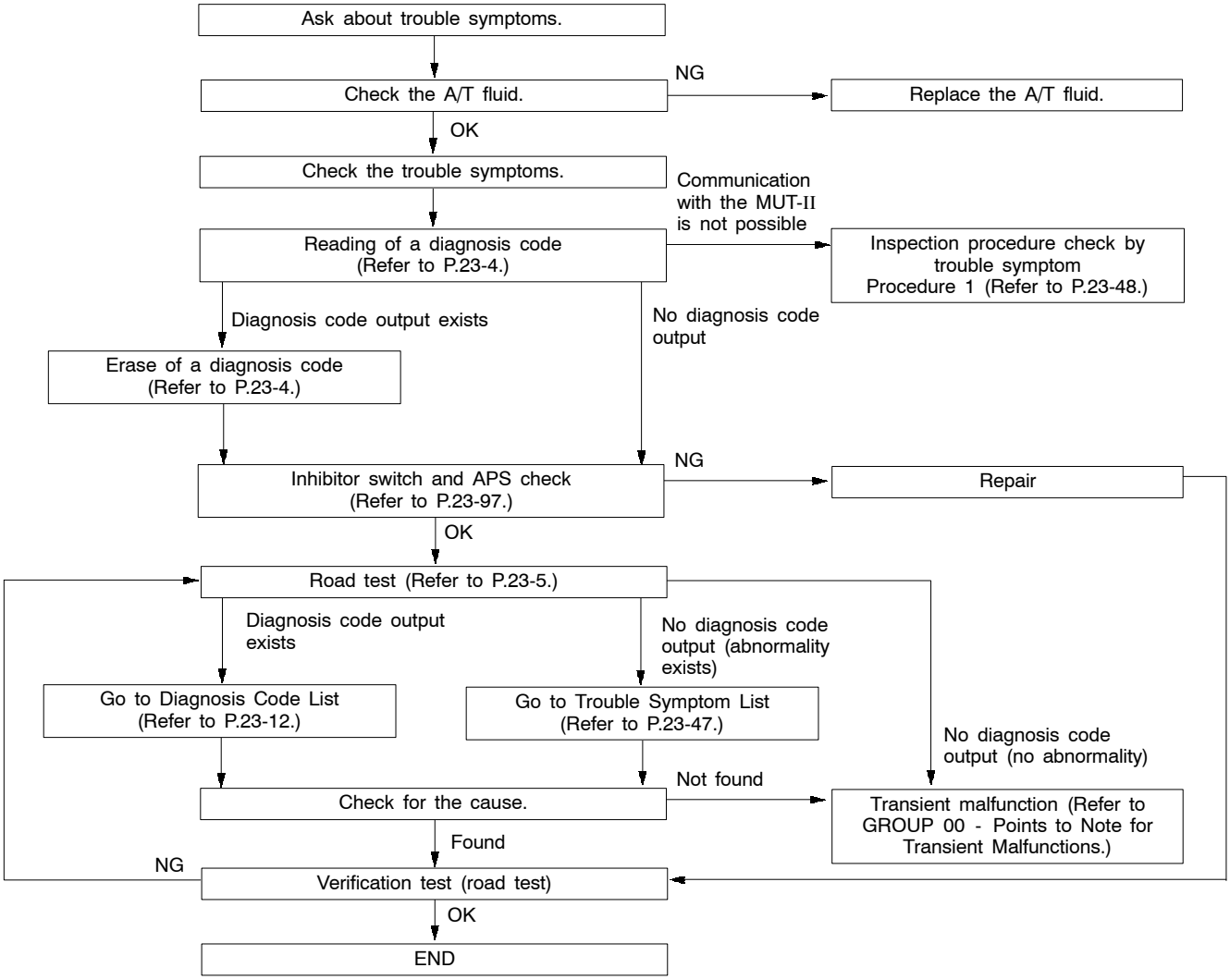

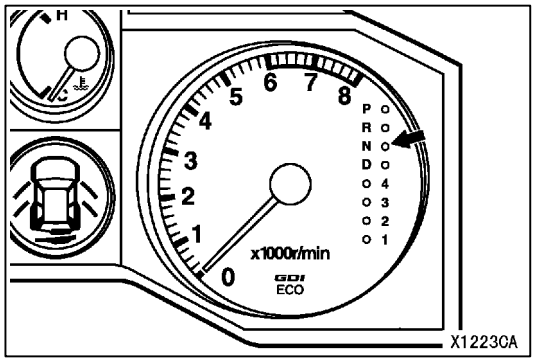

DIAGNOSIS FUNCTION

N RANGE LAMP

If there is a problem with any of the following items which are related to the A/T system, the N range lamp will flash at a rate of approximately 1 Hz.
If the N range lamp is flashing at a rate of approximately 1 Hz, check the diagnosis output.

- N range lamp flashing item

Input shaft speed sensor system
Output shaft sensor system
Solenoid valve system
Non-synchronization at various shift ranges
A/T control relay system

READING DIAGNOSIS CODES

Use the MUT-II or the warning lamp (N range indicator lamp) to take a reading of the diagnosis codes. (Refer to GROUP 00 - How to Use Troubleshooting/Inspection Procedures.)

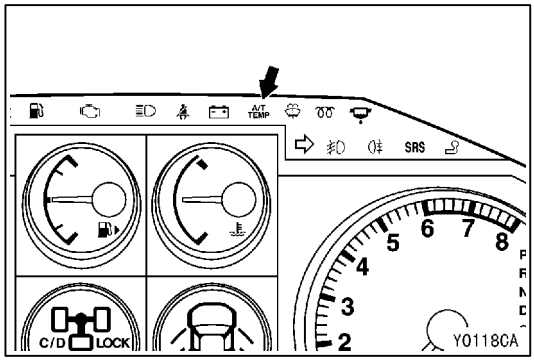

A/T FLUID TEMPERATURE WARNING LAMP

Caution
If the N range lamp illuminates, this serves as an A/T fluid temperature warning. Stop the vehicle in a safe place and let the engine run at idle until the N range lamp switches off.

ROAD TEST

No.	Pre-test/operation conditions	Test/operation	Judgment value	Check item	Diagnosis code No.	Inspection procedure if there is an abnormality
1	Ignition switch: OFF	Ignition switch (1) ON	Data List No. 54 (1) 10 - 12 V	A/T control relay	54	A/T control relay system
2	Ignition switch: ON Engine:Stop Selector lever position: P	Selector lever position (1) P (2) R (3) N (4) D	Data List No. 61 (1) P (2) R (3) N (4) D	Inhibitor switch	-	Inhibitor switch system
		Selector lever operation (1) D (1st) (2) Sports mode selected (1st) (3) Lever moved to upshift position and held (2nd) (4) Lever moved to downshift position and held (1st)	Data List No.67 No.68 No.69 (1) OFF OFF OFF (2) ON OFF OFF (3) ON ON OFF (4) ON OFF ON Shift indicator lamp (1) D and 1 illuminate (2) Only 1 illuminates (3) Only 2 illuminates (4) Only 1 illuminates	Select switch Upshift switch Downshift switch	-	Sports mode switch system
		Accelerator pedal (1) Fully closed (2) Depressed (3) Fully opened	Data List No. 11 (1) 985 - 1,085 mV (2) Gradually increases from (1) (3) 4,000 mV or more	APS	11 12 14	APS system
			Data list No.25 (1) OFF (2) ON	Wide open throttle switch	25	Wide open throttle switch system
2	Ignition switch: ON Engine: Stop Selector lever position: P	Brake pedal (1) Depressed (2) Released	Data List No. 26 (1) ON (2) OFF	Stop lamp switch	26	Stop lamp switch system
		Transfer shift lever position (1) Except for 4LLc (2) 4LLc	Data List No. 75 (1) OFF (2) ON	4LLc switch	-	4LLc switch system

No.	Pre-test/operation conditions	Test/operation	Judgment value	Check item	Diagnosis code No.	Inspection procedure if there is an abnormality
3	Ignition switch: START Engine: Stopped	Starting test at P or N position	Starting should be possible	Starting possible/not possible	-	Starting not possible
4	Driving after engine has warmed up	Drive for 15 minutes or more until the A/T fluid temperature rises to 70 - 80°C.	Data list No.15 Gradually rises to 70 - 80°C	A/T fluid temperature sensor	15	A/T fluid temperature sensor system
5	Engine: Idling Selector lever position: N	Brake pedal (re-test) (1) Depressed (2) Released	Data List No. 26 (1) ON (2) OFF	Stop lamp switch	26	Stop lamp switch system
		A/C switch (1) ON (2) OFF	Data List No. 65 (1) ON (2) OFF	Dual pressure switch	-	Dual pressure switch system
		Accelerator pedal (1) Fully closed (2) Apply	Data List No. 21 (1) The engine speed displayed on the tachometer is identical to the engine speed displayed on MUT-II. (2) Gradually increases from (1)	Crank angle sensor <6G7> Engine speed sensor <4M4>	21	Crank angle sensor system <6G7> Engine speed sensor system <4M4>
			Data List No.73 <6G7> No.76 <4M4> (2) Data changes.	Communication with engine-ECU	51	Serial communication system
		Selector lever position (1) N to D (2) N to R	No abnormal shock during shifting Within 2 seconds of time lag	Malfunction when starting off	-	Engine stalls during shifting
					-	N-to-D shocks, large time lag
					-	N-to-R shocks, large time lag
					-	N-to-D, N-to-R shocks, large time lag
				Driving not possible	-	Does not move forward
					-	Does not reverse
					-	Does not move (forward or reverse)

No.	Pre-test/operation conditions	Test/operation	Judgment value	Check item	Diagnosis code No.	Inspection procedure if there is an abnormality
6	Selector lever position: Sports mode (Must be done on a level and straight road.)	Selector lever position and engine (1) Idling in 1st (Vehicle stopped) (2) Driving at a constant speed of 10 km/h in 1st (3) Driving at a constant speed of 30 km/h in 2nd (4) Driving at a constant speed of 50 km/h in 3rd (5) Driving at a constant speed of 50 km/h in 4th (6) Driving at a constant speed of 70 km/h in 5th (Each condition should be maintained for 10 seconds or more)	Data List No. 63 (2) 1st (3) 2nd (4) 3rd (5) 4th (6) 5th	Shift condition	-	-
			Data List No. 31 (2) 0% (3) 100% (4) 100% (5) 100% (6) 100%	Low & reverse solenoid valve (LR solenoid valve)	31	LR solenoid valve system
			Data List No. 32 (2) 0% (3) 0% (4) 0% (5) 0% (6) 100%	Underdrive solenoid valve (UD solenoid valve)	32	UD solenoid valve system
			Data List No. 33 (2) 100% (3) 0% (4) 100% (5) 100% (6) 0%	Second solenoid valve (2ND solenoid valve)	33	2nd solenoid valve system
			Data List No. 34 (2) 100% (5) 0% (3) 100% (6) 0% (4) 0%	Overdrive solenoid valve (OD solenoid valve)	34	OD solenoid valve system
			Data List No. 35 (2) 0% (5) 100% (3) 0% (6) 100% (4) 0%	Reduction solenoid valve (RED solenoid valve)	35	RED solenoid valve system
			Data List No. 29 (1) 0 km/h (5) 50 km/h	Vehicle speed sensor	-	Vehicle speed sensor system
			Data List No. 22 (5) 1,300 - 1,600 r/min	Input shaft speed sensor	22	Input shaft speed sensor system
			Data List No. 23 (5) 1,300 - 1,600 r/min	Output shaft speed sensor	23	Output shaft sensor system
		Selector lever position and engine (1) Driving at 30 km/h in 2 range, then fully close the accelerator. (2) Driving at a constant speed of 50 km/h in 4th	Data List No. 36 (1) 70% - 90% to 0% (2) 70% - 90%	Damper clutch control solenoid valve (DCC solenoid valve)	36 52	DCC solenoid valve system
			Data List No. 52 (1) -300 - -100 r/min or 100 - 300 r/min (2) -10 - 10 r/min			

No.	Pre-test/operation conditions	Test/operation	Judgment value	Check item	Diagnosis code No.	Inspection procedure if there is an abnormality
7	Suspends the INVECS-II function using MUT-II Selector level position:D (Must be done on a level and straight road.)	Use the MUT-II to monitor data list Nos. 11, 23 and 63. (1) Accelerate to 5th gear at an APS output of 1.5 V (opening angle 30%). (2) Slowly decelerate and stop. (3) Accelerate to 5th gear at an APS output of 2.5 V (opening angle 50%). (4) At 60 km/h in 5th, select Sports mode and shift down to 4th. (5) At 40 km/h in 4th, select Sports mode and shift down to 3rd. (6) At 20 km/h in 3rd, shift down to 2nd. (7) At 20 km/h in 2nd, shift down to 1st.	For (1), (2) and (3), the output shaft speed (vehicle speed) should be identical, and there should be no abnormal shocks. For (4), (5) and (6), downshifting should occur immediately after the operation is carried out.	Problem during shifting	-	Shocks, engine racing
				Incorrect shift points	-	All points
					-	Some points
				No shifting	-	No diagnosis codes
					22	Input shaft speed sensor system
					23	Output shaft sensor system
				No shifting from 1st to 2nd, or no shifting from 2nd to 1st	31	LR solenoid valve system
					33	2nd solenoid valve system
					41	1st without completion of shifting
					42	2nd without completion of shifting
				No shifting from 2nd to 3rd, or no shifting from 3rd to 2nd	33	2nd solenoid valve system
					34	OD solenoid valve system
					42	2nd without completion of shifting
					43	3rd without completion of shifting
				No shifting from 3rd to 4th, or no shifting from 4th to 3rd	31	LR solenoid valve system
					35	RED solenoid valve system
					43	3rd without completion of shifting
					44	4th without completion of shifting
				No shifting from 4th to 5th, or no shifting from 5th to 4th	32	UD solenoid valve system
					33	2nd solenoid valve system
					44	4th without completion of shifting
					45	5th without completion of shifting

No.	Pre-test/operation conditions	Test/operation	Judgment value	Check item	Diagnosis code No.	Inspection procedure if there is an abnormality
8	Selector lever position: N	Use the MUT-II to monitor data list Nos. 22 and 23. (1) Select R and drive at 10 km/h.	The ration of data list No. 22 and No. 23 should be the same as the transmission ratio when reversing.	No shifting	22	Input shaft speed sensor system
					23	Output shaft sensor system
					46	Reverse without completion of shifting

SHIFT PATTERN

<4M4>

Upshift pattern

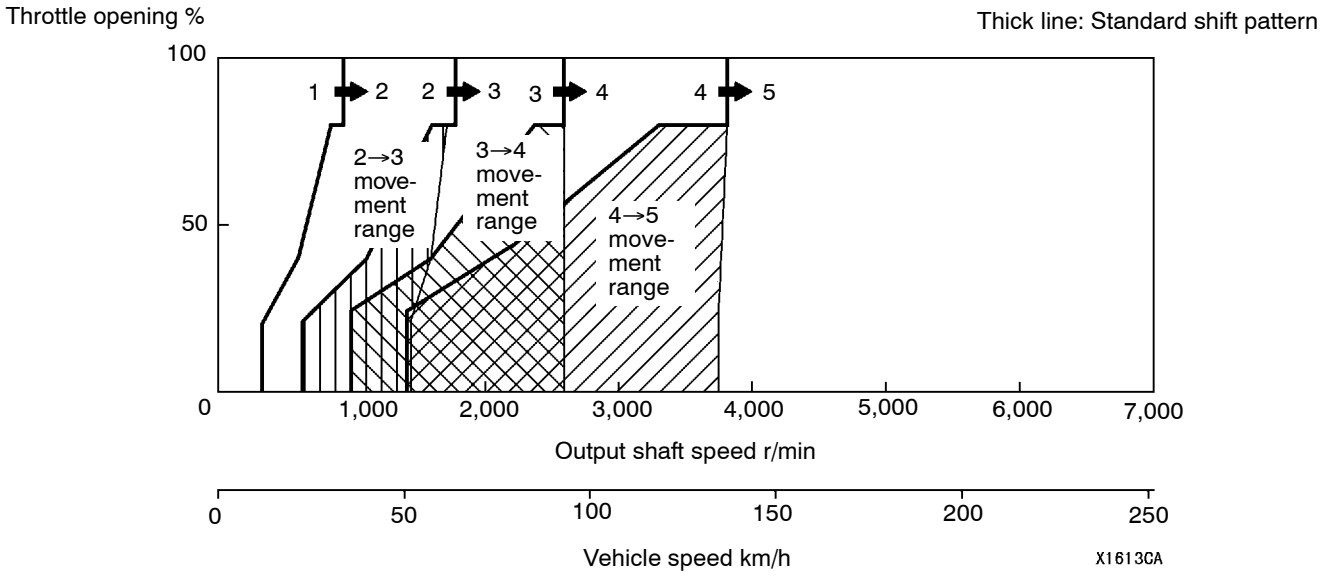

Downshift pattern

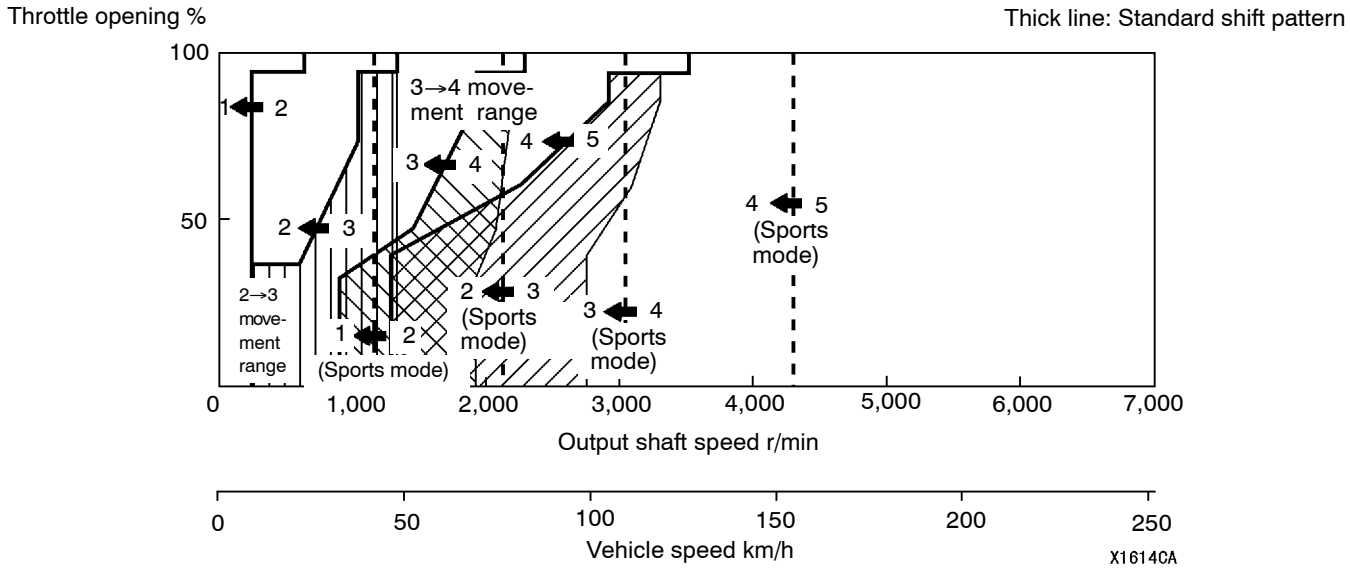

<6G7>

Upshift pattern

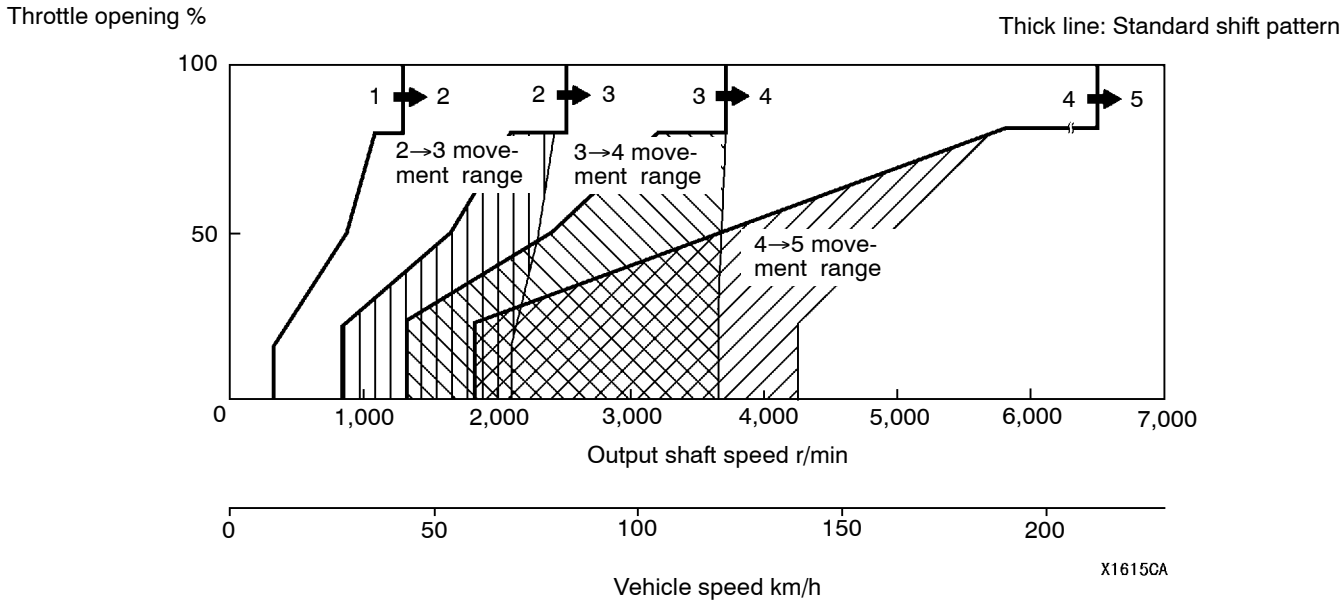

Downshift pattern

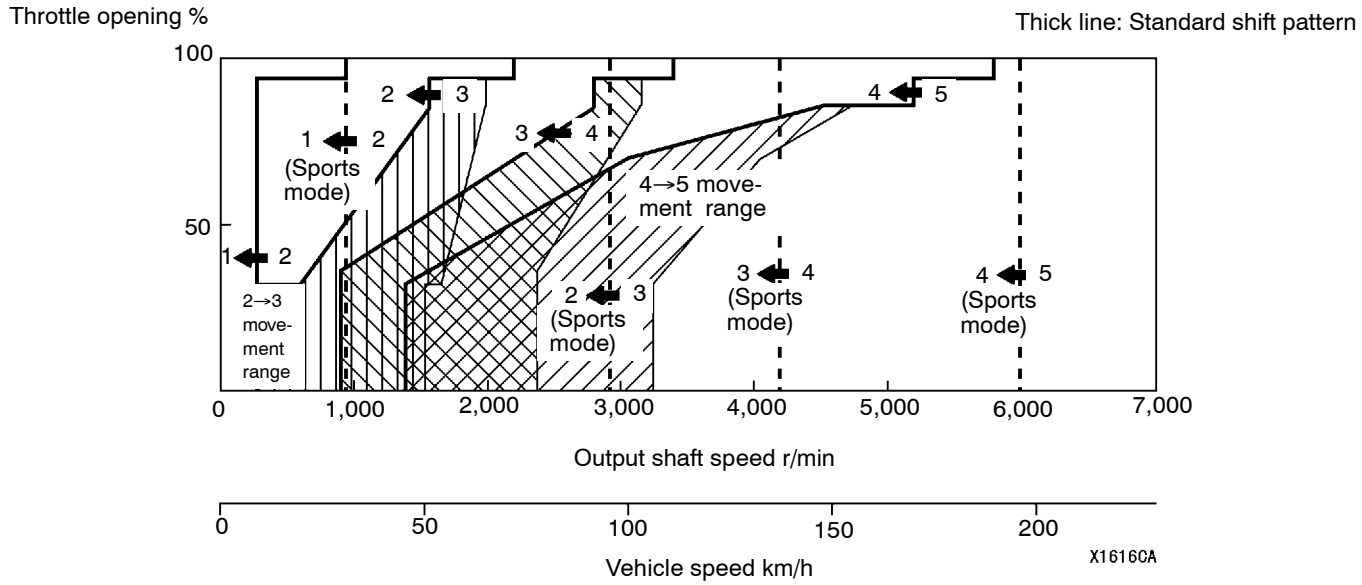

CHART CLASSIFIED BY DIAGNOSIS CODE

Diagnosis code	Diagnosis item		Reference page
11	Accelerator pedal position sensor (APS) system	Short-circuit	23-13
12		Open circuit	23-14
14		Incorrect sensor adjustment	23-15
15	A/T fluid temperature sensor system	Open circuit	23-17
21	Crank angle sensor system <6G7> or engine speed sensor system <4M4>	Open circuit	23-18
22	Input shaft speed sensor system	Short-circuit/Open circuit	23-20
23	Output shaft speed sensor system	Short-circuit/Open circuit	23-22
25	Wide open throttle switch system	Short-circuit/Open circuit	23-24
26	Stop lamp switch system	Short-circuit	23-25
31	LR solenoid valve system	Short-circuit/Open circuit	23-26
32	UD solenoid valve system	Short-circuit/Open circuit	23-27
33	2nd solenoid valve system	Short-circuit/Open circuit	23-28
34	OD solenoid valve system	Short-circuit/Open circuit	23-29
35	RED solenoid valve system	Short-circuit/Open circuit	23-30
36	DCC solenoid valve system	Short-circuit/Open circuit	23-31
41	1st without completion of shifting		23-32
42	2nd without completion of shifting		23-34
43	3rd without completion of shifting		23-36
44	4th without completion of shifting		23-38
45	5th without completion of shifting		23-40
46	Reverse without completion of shifting		23-42
51	Problem communicating with engine-ECU		23-43
52	Damper clutch control system	System malfunction	23-44
54	A/T control relay system	Short-circuit to earth/Open circuit	23-45
56	N range lamp system	Short-circuit to earth	23-46

INSPECTION PROCEDURES CLASSIFIED BY DIAGNOSIS CODE

Code No. 11 Accelerator pedal position sensor (APS) short-circuit system	Probable cause
If the APS output during idling is 4.8 V or higher, it is judged that there is excessive output, and code No. 11 is output.	• Malfunction of APS • Malfunction of harness or connector • Malfunction of engine-A/T-ECU <6G7> • Malfunction of A/T-ECU <4M4> • Malfunction of engine-ECU <4M4>

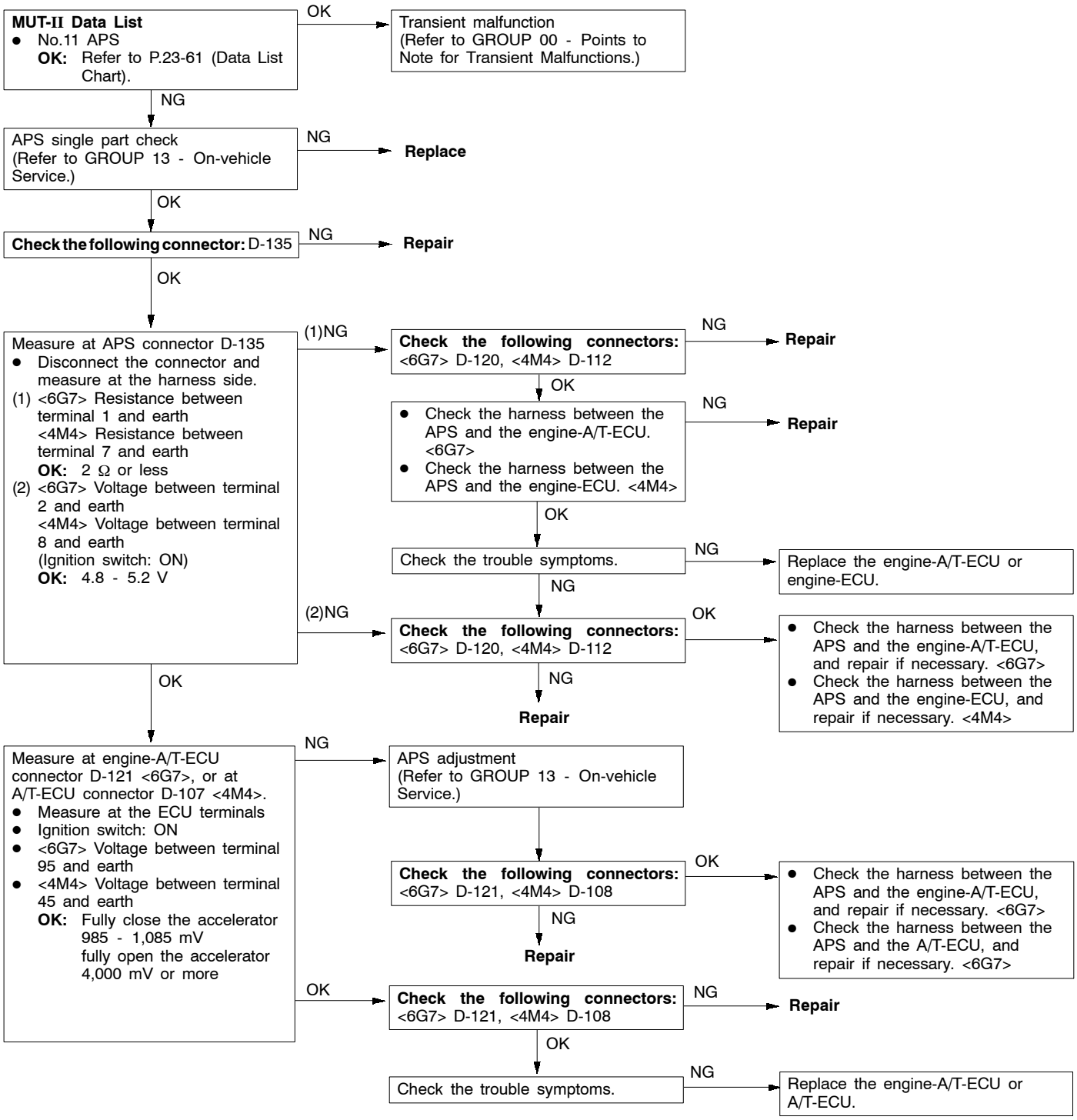

Code No. 12 Accelerator pedal position sensor (APS) open circuit system	Probable cause
When the APS output is 0.2 V or less while the engine is idling, it is judged that output is too low and code No. 12 is output.	• Malfunction of APS • Malfunction of harness or connector • Malfunction of engine-A/T-ECU <6G7> • Malfunction of A/T-ECU <4M4> • Malfunction of engine-ECU <4M4>

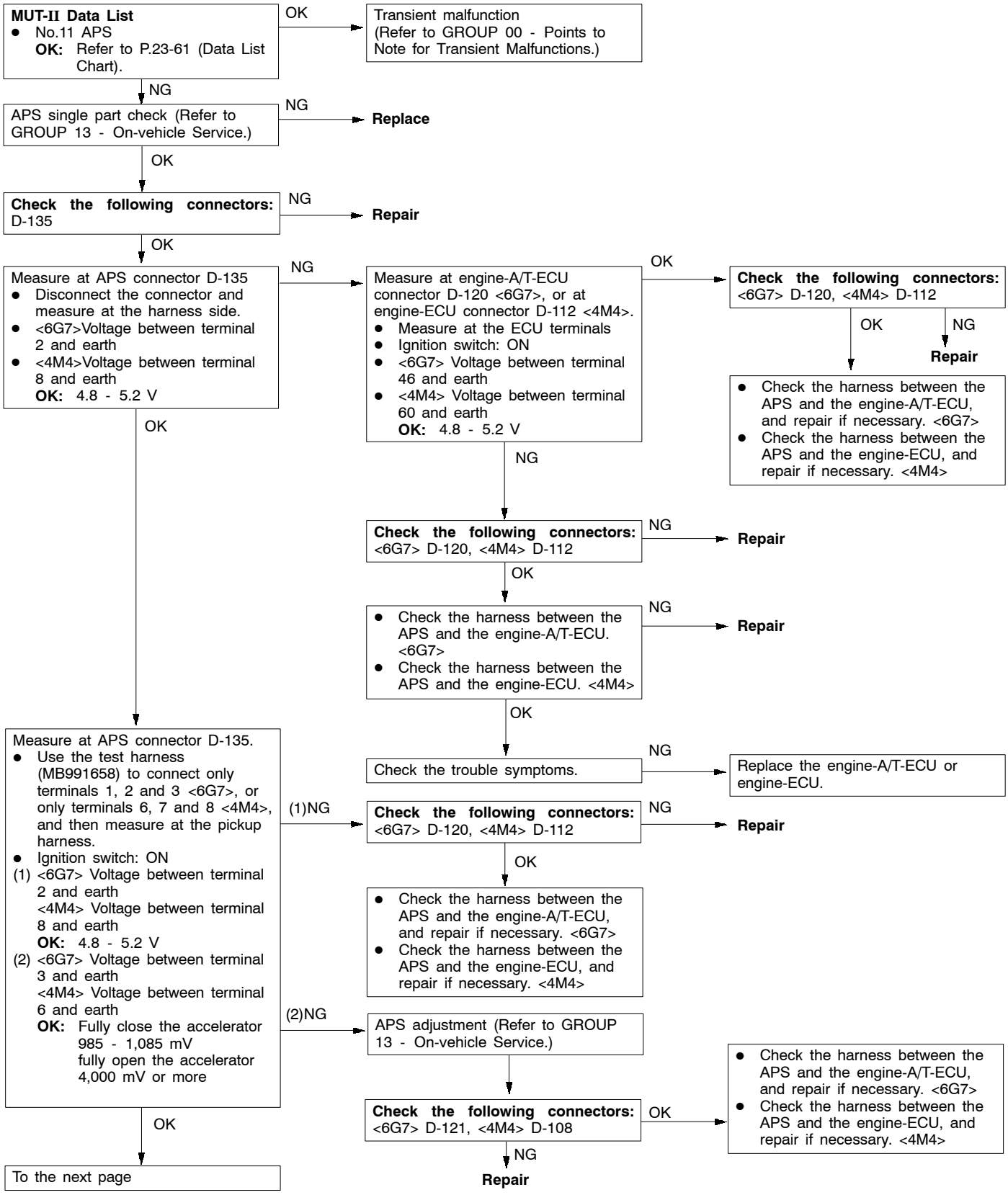

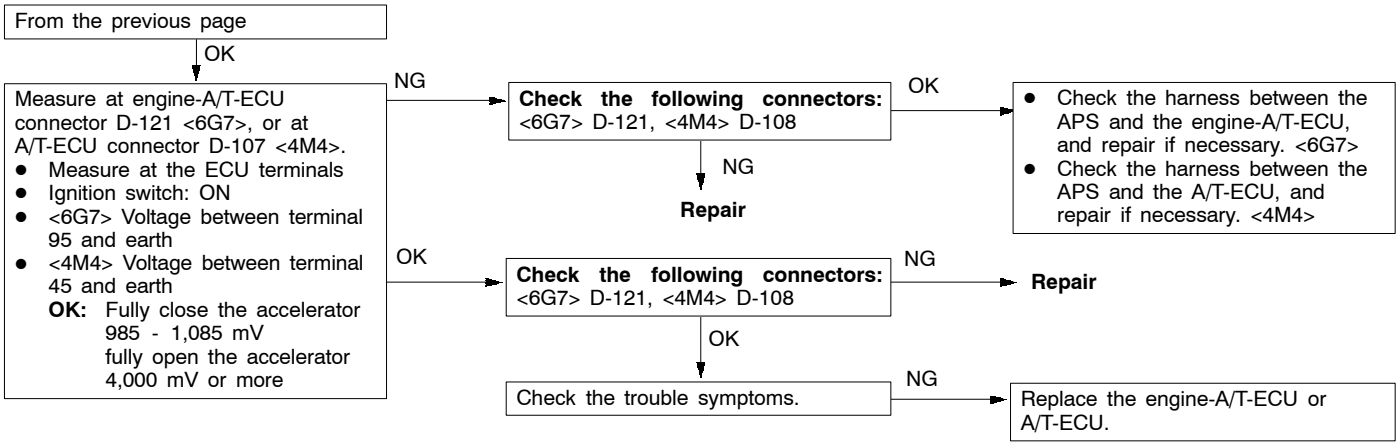

Code No. 14 Accelerator pedal position sensor (APS) incorrect adjustment system	Probable cause
If the APS output is 0.2 V or less or 1.2 V or higher while the engine is idling, it is judged that the APS is incorrectly adjusted, and code No. 14 is output.	● Malfunction of APS ● Malfunction of harness or connector ● Malfunction of engine-A/T-ECU <6G7> ● Malfunction of A/T-ECU <4M4> ● Malfunction of engine-ECU <4M4>

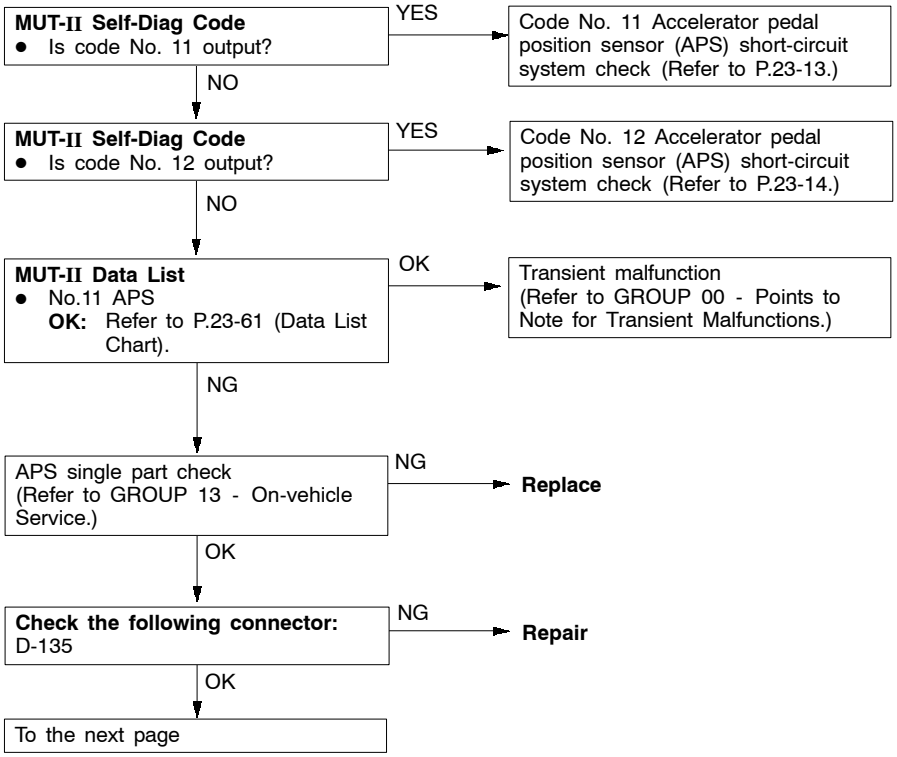

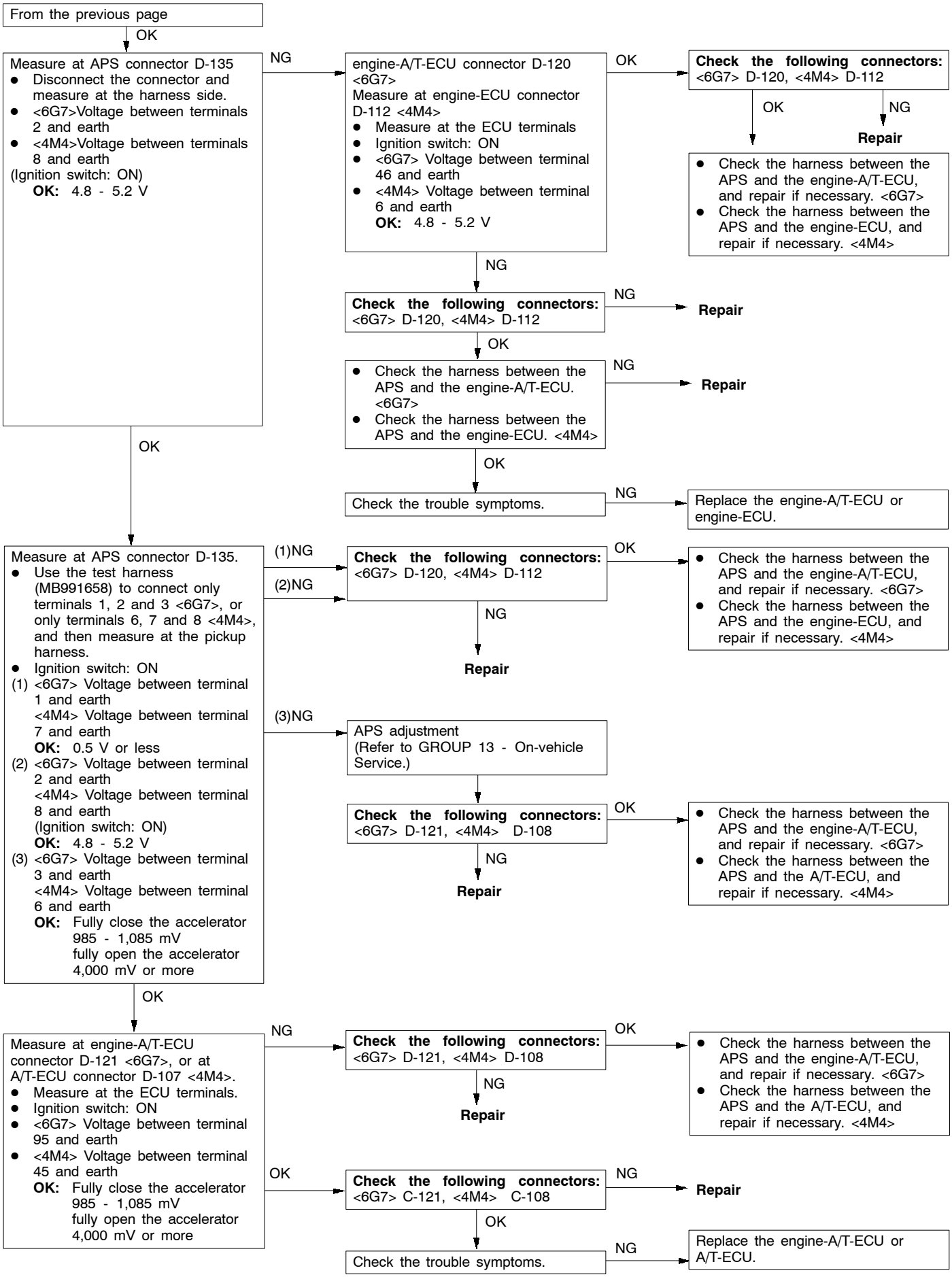
From the previous page
OK
Measure at APS connector D-135
● Disconnect the connector and measure at the harness side.
● <6G7>Voltage between terminals 2 and earth
● <4M4>Voltage between terminals 8 and earth
(Ignition switch: ON)
OK: 4.8 - 5.2 V
NG
engine-A/T-ECU connector D-120 <6G7>
Measure at engine-ECU connector D-112 <4M4>
● Measure at the ECU terminals
● Ignition switch: ON
● <6G7> Voltage between terminal 46 and earth
● <4M4> Voltage between terminal 6 and earth
OK: 4.8 - 5.2 V
OK
Check the following connectors: <6G7> D-120, <4M4> D-112
OK
NG
Repair
● Check the harness between the APS and the engine-A/T-ECU, and repair if necessary. <6G7>
● Check the harness between the APS and the engine-ECU, and repair if necessary. <4M4>
NG
Check the following connectors: <6G7> D-120, <4M4> D-112
NG
Repair
OK
● Check the harness between the APS and the engine-A/T-ECU. <6G7>
● Check the harness between the APS and the engine-ECU. <4M4>
NG
Repair
OK
Check the trouble symptoms.
NG
Replace the engine-A/T-ECU or engine-ECU.
OK
Measure at APS connector D-135.
● Use the test harness (MB991658) to connect only terminals 1, 2 and 3 <6G7>, or only terminals 6, 7 and 8 <4M4>, and then measure at the pickup harness.
● Ignition switch: ON
(1) <6G7> Voltage between terminal 1 and earth
<4M4> Voltage between terminal 7 and earth
OK: 0.5 V or less
(2) <6G7> Voltage between terminal 2 and earth
<4M4> Voltage between terminal 8 and earth
(Ignition switch: ON)
OK: 4.8 - 5.2 V
(3) <6G7> Voltage between terminal 3 and earth
<4M4> Voltage between terminal 6 and earth
OK: Fully close the accelerator 985 - 1,085 mV
fully open the accelerator 4,000 mV or more
(1)NG
(2)NG
Check the following connectors: <6G7> D-120, <4M4> D-112
OK
● Check the harness between the APS and the engine-A/T-ECU, and repair if necessary. <6G7>
● Check the harness between the APS and the engine-ECU, and repair if necessary. <4M4>
NG
Repair
(3)NG
APS adjustment
(Refer to GROUP 13 - On-vehicle Service.)
Check the following connectors: <6G7> D-121, <4M4> D-108
OK
● Check the harness between the APS and the engine-A/T-ECU, and repair if necessary. <6G7>
● Check the harness between the APS and the A/T-ECU, and repair if necessary. <4M4>
NG
Repair
OK
Measure at engine-A/T-ECU connector D-121 <6G7>, or at A/T-ECU connector D-107 <4M4>.
● Measure at the ECU terminals.
● Ignition switch: ON
● <6G7> Voltage between terminal 95 and earth
● <4M4> Voltage between terminal 45 and earth
OK: Fully close the accelerator 985 - 1,085 mV
fully open the accelerator 4,000 mV or more
NG
Check the following connectors: <6G7> D-121, <4M4> D-108
OK
● Check the harness between the APS and the engine-A/T-ECU, and repair if necessary. <6G7>
● Check the harness between the APS and the A/T-ECU, and repair if necessary. <4M4>
NG
Repair
OK
Check the following connectors: <6G7> C-121, <4M4> C-108
NG
Repair
OK
Check the trouble symptoms.
NG
Replace the engine-A/T-ECU or A/T-ECU.

Code No. 15 A/T fluid temperature sensor system	Probable cause
If the A/T fluid temperature sensor output is 4.5 V or higher even after driving for 10 minutes or more (fluid temperature does not rise), it is judged that there is an open circuit in the A/T fluid temperature sensor and code No. 15 is output.	● Malfunction of A/T fluid temperature sensor ● Malfunction of harness or connector ● Malfunction of engine-A/T-ECU <6G7> ● Malfunction of A/T-ECU <4M4>

★ Refer to the Transmission Workshop Manual.

MUT-II Data List
- No.15 A/T fluid temperature sensor
  OK: When the engine is cold, the temperature is about the same as the atmospheric temperature (air temperature).
  When the engine is hot, the temperature is 70 - 80°C.

OK → Transient malfunction (Refer to GROUP 00 - Points to Note for Transient Malfunctions.)

NG ↓

Measure at engine-A/T-ECU connector D-121 <6G7>, or at A/T-ECU connector D-107 <4M4>.
- Measure at the ECU terminals
- Ignition switch: ON
- <6G7> Voltage between terminal 81 and earth
- <4M4> Voltage between terminal 43 and earth
  OK: 0.5 V or less

NG → **Check the following connectors:** <6G7> D-121, <4M4> D-108
- OK → Check the trouble symptoms.
  - NG → Replace the engine-A/T-ECU or A/T-ECU.
- NG → **Repair**

OK ↓

Measure at engine-A/T-ECU connector D-122 <6G7>, or at A/T-ECU connector D-108 <4M4>.
- Measure at the ECU terminals
- Ignition switch: ON
- <6G7> Voltage between terminal 124 and earth
- <4M4> Voltage between terminal 44 and earth
  OK: A/T fluid temperature
  3.8 - 4.0 V at 20°C
  3.2 - 3.4 V at 40°C
  1.7 - 1.9 V at 80°C

NG → **Check the following connectors:** <6G7> D-122, <4M4> D-108
- OK → Check the trouble symptoms.
  - NG → Replace the engine-A/T-ECU or A/T-ECU.
- NG → **Revision**

OK ↓

Check the following connectors: <6G7> C-04, D-122, D-121,<4M4> D-108, C-04

NG → **Repair**

OK ↓

Measure at solenoid valve assembly connector C-04.
- Disconnect the connector and measure at the sensor side.
- Resistance between terminals 1 and 2
  OK: A/T fluid temperature
  16.7 - 20.5 kΩ at 0°C
  7.3 - 8.9 kΩ at 20°C
  3.4 - 4.2 kΩ at 40°C
  1.9 - 2.2 kΩ at 60°C
  1.0 - 1.2 kΩ at 80°C
  0.57 - 0.69 kΩ at 100°C

NG → Replace the A/T fluid temperature sensor. ★

OK ↓

To the next page

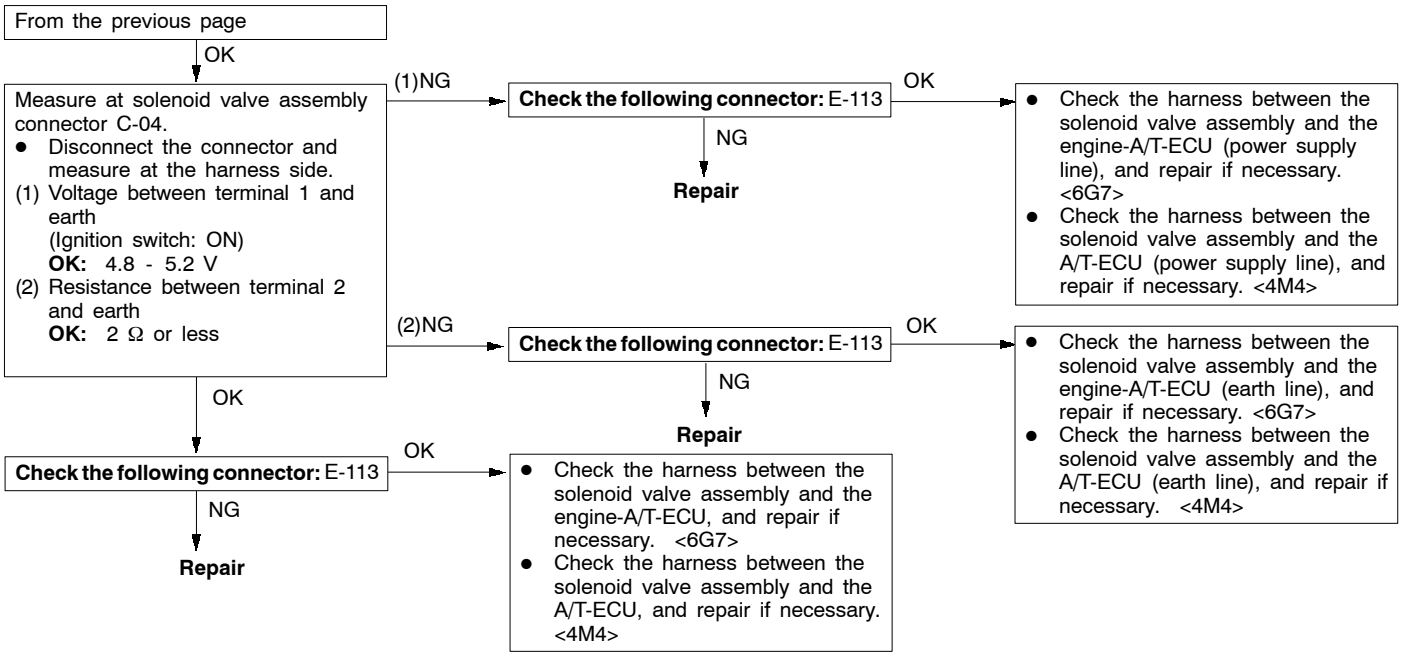

Code No. 21 Crank angle sensor <6G7> or engine speed sensor <4M4> system	Probable cause
If no output pulse from the crank angle sensor or engine speed sensor is detected for 5 seconds or more when the vehicle speed is 25 km/h or more, it is judged that there is an open circuit in the crank angle sensor or an open circuit in the engine speed sensor, and code No. 21 is output.	● Malfunction of crankshaft sensing blade <6G7> ● Malfunction of crank angle sensor <6G7> ● Malfunction of engine speed sensor <4M4> ● Malfunction of harness or connector ● Malfunction of engine-A/T-ECU <6G7> ● Malfunction of A/T-ECU <4M4>

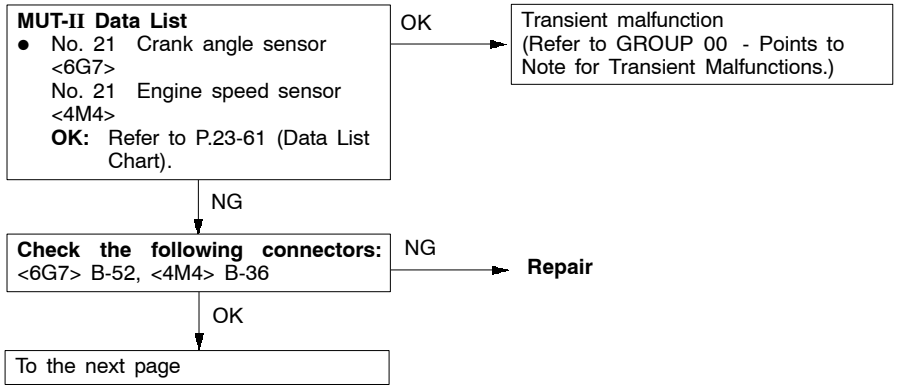

From the previous page

OK

Measure at crank angle sensor connector B-52 <6G7>, or at injection pump assembly connector B-36 <4M4>.
- Disconnect the connector and measure at the harness side.

(1) <6G7> Resistance between terminal 1 and earth
<4M4> Resistance between terminal 4 and earth
OK: 2 Ω or less

(2) Voltage between terminal 2 and earth
(Ignition switch: ON)
OK: 4.8 - 5.2 V

(3) Voltage between terminal 3 and earth
(Ignition switch: ON)
OK: System voltage

(1)NG → **Check the following connectors:** <6G7> B-52, <4M4> B-36
- OK → Check the harness between the crank angle sensor and body earth, and repair if necessary. <6G7>
- Check the harness between the injection pump assembly and body earth, and repair if necessary. <4M4>
- NG → **Repair**

(2)NG → Measure at engine-A/T-ECU connector D-120 <6G7>, or at A/T-ECU connector D-107 <4M4>.
- Measure at the ECU terminals
- Disconnect connector B-52 <6G7>, or connector B-36 <4M4>.
- Ignition switch: ON
- <6G7> Voltage between terminal 45 and earth
- <4M4> Voltage between terminals 33 and earth

OK: 4.8 - 5.2 V

- OK → **Check the following connectors:** <6G7> D-120,<4M4> D-113, D-108
  - OK → Check the harness between the crank angle sensor and the engine-A/T-ECU, and repair if necessary. <6G7>
  - Check the harness between the injection pump assembly and the A/T-ECU, and repair if necessary. <4M4>
  - NG → **Repair**
- NG → **Check the following connectors:** <6G7> D-120, <4M4> D-113, D-108
  - NG → **Repair**
  - OK → Check the harness between the crank angle sensor and the engine-A/T-ECU. <6G7>
    - Check the harness between the injection pump assembly and the A/T-ECU. <4M4>
    - OK → Check the trouble symptoms.
      - NG → Replace the engine-A/T-ECU or A/T-ECU.
    - NG → **Repair**

(3)NG → **Check the following connector:** B-25X
- OK → Check the harness between the crank angle sensor and the engine control relay, and repair if necessary. <6G7>
  - Check the harness between the injection pump assembly and the engine control relay, and repair if necessary. <4M4>
- NG → **Repair**

OK

Measure the output wave pattern at crank angle sensor connector B-52 <6G7>, or at injection pump assembly connector B-36 <4M4> (using an oscilloscope).
- Use the test harness (MD998478) to connect the terminals, and then measure at the pickup harness.
- Engine: Idling
- Selector lever position: P
- Voltage between terminal 2 and earth

OK: A wave pattern such as the one shown on P.23-69 (Check Procedure Using an Oscilloscope) should be output, and the maximum value should be 4.8 V or more and the minimum value should be 0.6 V or less. There should be no noise in the output wave pattern.

- OK → Check the trouble symptoms.
  - NG → Replace the engine-A/T-ECU or A/T-ECU.
- NG → **Check the following connectors:** <6G7> B-52, D-120, B-25X <4M4> D-108, D-113, B-36, B-25X
  - NG → **Repair**
  - OK → Check the harness between the crank angle sensor and the engine-A/T-ECU, and repair if necessary. <6G7>
    - Check the harness between the engine speed sensor and the A/T-ECU, and repair if necessary. <4M4>
    - Check the harness between the crank angle sensor and the engine control relay, and repair if necessary. <6G7>
    - Check the harness between the engine speed sensor and the engine control relay, and repair if necessary. <4M4>
    - Check the harness between the crank angle sensor and body earth, and repair if necessary. <6G7>
    - Check the harness between the engine speed sensor and body earth, and repair if necessary. <4M4>
    - NG → **Repair**
    - OK → Check the trouble symptoms.
      - NG → Replace the crank angle sensor <6G7> or the engine speed sensor <4M4>.
      - Replace the crankshaft sensing blade. <6G7>

Code No. 22 Input shaft speed sensor system	Probable cause
If no output pulse from the input shaft speed sensor is detected for 1 second or more while the vehicle is driving at 30 km/h or more in 4th, it is judged that there is a short-circuit or open circuit in the input shaft speed sensor, and code No. 22 is output. If code No. 22 is output 4 times, the transmission is locked at 3rd gear (D) or 2nd gear (downshift operation in Sports mode) as a fail-safe measure, and the N range indicator lamp flashes at 1 Hz.	● Malfunction of input shaft speed sensor ● Malfunction of reverse clutch retainer ● Malfunction of harness or connector ● Malfunction of engine-A/T-ECU <6G7> ● Malfunction of A/T-ECU <4M4>

★ Refer to the Transmission Workshop Manual.

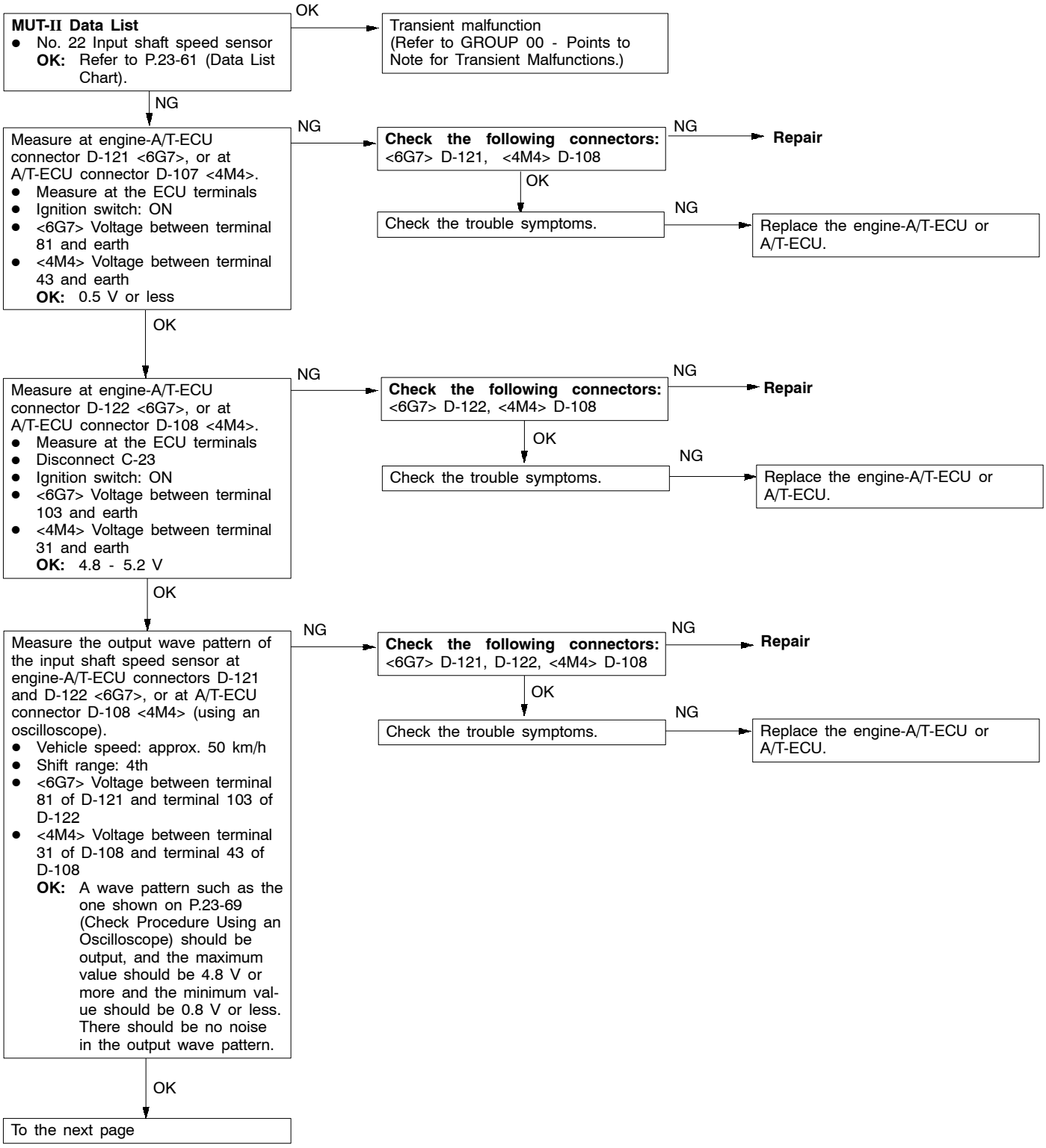

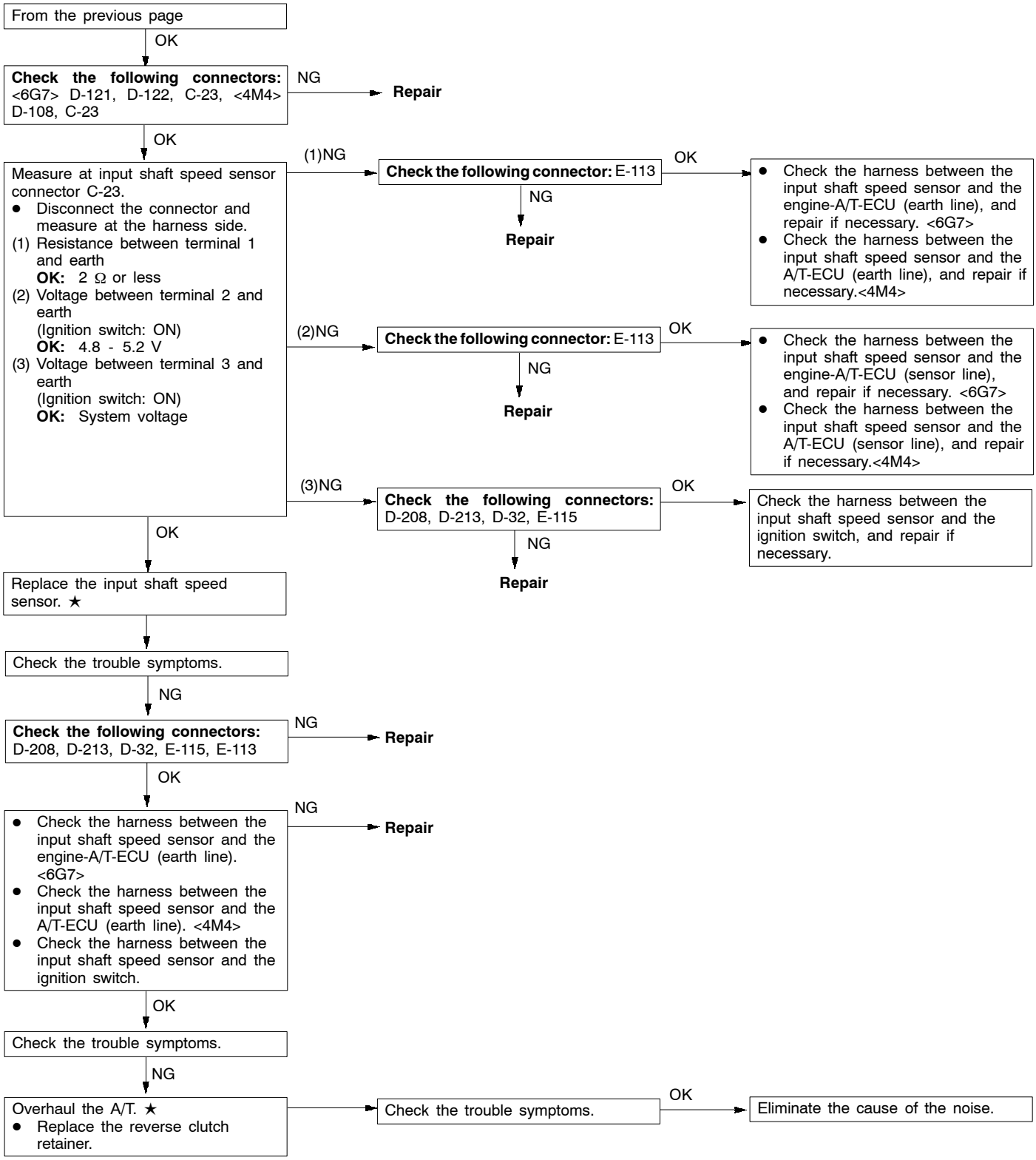
From the previous page
OK
Check the following connectors: <6G7> D-121, D-122, C-23, <4M4> D-108, C-23
NG
Repair
OK
Measure at input shaft speed sensor connector C-23.
● Disconnect the connector and measure at the harness side.
(1) Resistance between terminal 1 and earth
OK: 2 Ω or less
(2) Voltage between terminal 2 and earth
(Ignition switch: ON)
OK: 4.8 - 5.2 V
(3) Voltage between terminal 3 and earth
(Ignition switch: ON)
OK: System voltage
(1)NG
Check the following connector: E-113
OK
● Check the harness between the input shaft speed sensor and the engine-A/T-ECU (earth line), and repair if necessary. <6G7>
● Check the harness between the input shaft speed sensor and the A/T-ECU (earth line), and repair if necessary.<4M4>
NG
Repair
(2)NG
Check the following connector: E-113
OK
● Check the harness between the input shaft speed sensor and the engine-A/T-ECU (sensor line), and repair if necessary. <6G7>
● Check the harness between the input shaft speed sensor and the A/T-ECU (sensor line), and repair if necessary.<4M4>
NG
Repair
(3)NG
Check the following connectors: D-208, D-213, D-32, E-115
OK
Check the harness between the input shaft speed sensor and the ignition switch, and repair if necessary.
NG
Repair
OK
Replace the input shaft speed sensor. ★
Check the trouble symptoms.
NG
Check the following connectors: D-208, D-213, D-32, E-115, E-113
NG
Repair
OK
● Check the harness between the input shaft speed sensor and the engine-A/T-ECU (earth line). <6G7>
● Check the harness between the input shaft speed sensor and the A/T-ECU (earth line). <4M4>
● Check the harness between the input shaft speed sensor and the ignition switch.
NG
Repair
OK
Check the trouble symptoms.
NG
Overhaul the A/T. ★
● Replace the reverse clutch retainer.
Check the trouble symptoms.
OK
Eliminate the cause of the noise.

Code No. 23 Output shaft speed sensor system	Probable cause
If the output from the output shaft speed sensor is 50% or less continuously for 1 second or more while the vehicle is driving at 30 km/h or more in 4th, it is judged that there is a short-circuit or open circuit in the output shaft speed sensor, and code No. 23 is output. If code No. 23 is output 4 times, the transmission is locked at 3rd gear (D) or 2nd gear (downshift operation in Sports mode) as a fail-safe measure, and the N range indicator lamp flashes at 1 Hz.	● Malfunction of output shaft speed sensor ● Malfunction of direct planetary carrier ● Malfunction of harness or connector ● Malfunction of engine-A/T-ECU <6G7> ● Malfunction of A/T-ECU <4M4>

★ Refer to the Transmission Workshop Manual.

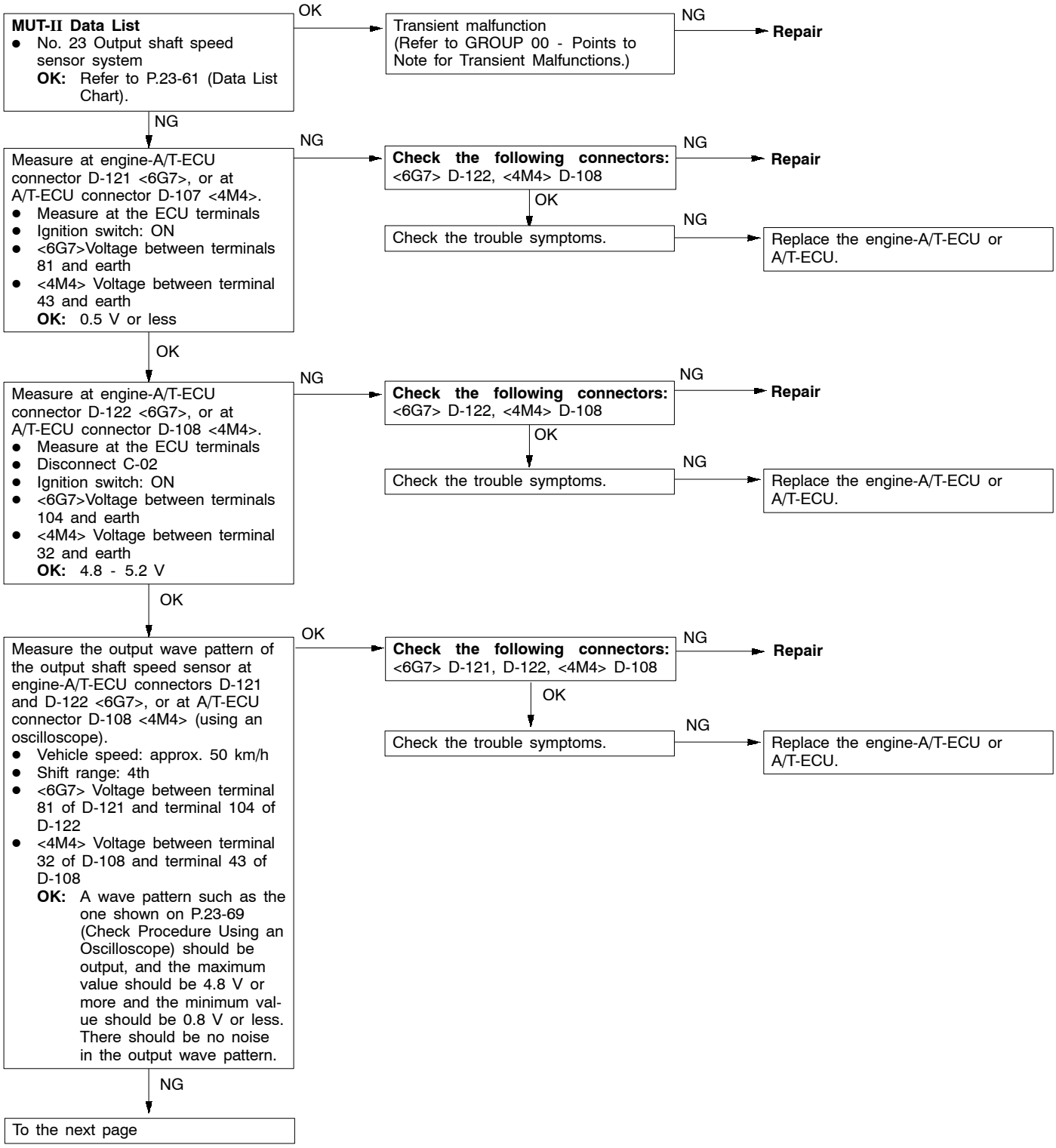

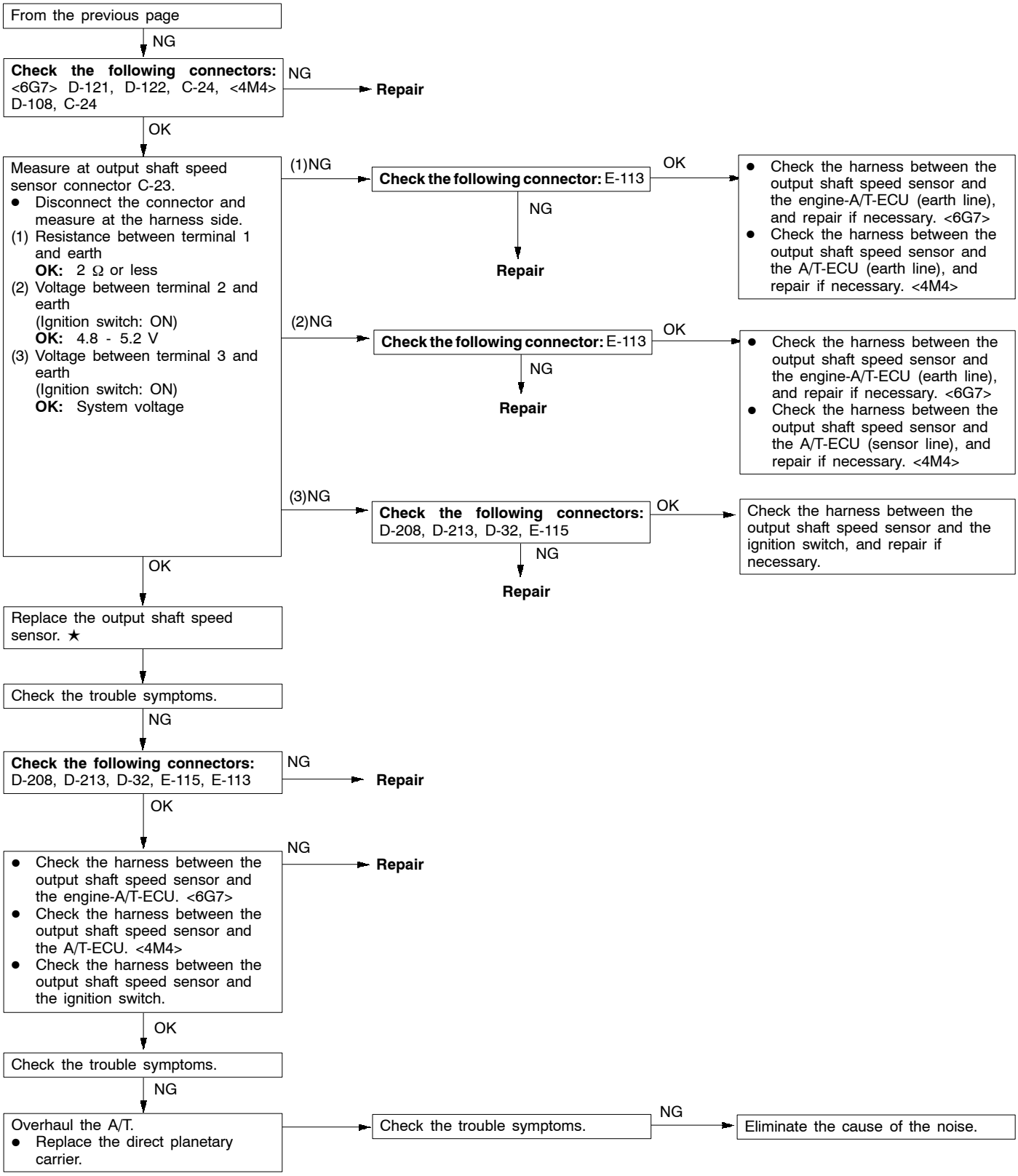
From the previous page
NG
Check the following connectors: <6G7> D-121, D-122, C-24, <4M4> D-108, C-24
NG
Repair
OK
Measure at output shaft speed sensor connector C-23.
● Disconnect the connector and measure at the harness side.
(1) Resistance between terminal 1 and earth
OK: 2 Ω or less
(2) Voltage between terminal 2 and earth
(Ignition switch: ON)
OK: 4.8 - 5.2 V
(3) Voltage between terminal 3 and earth
(Ignition switch: ON)
OK: System voltage
(1)NG
Check the following connector: E-113
OK
● Check the harness between the output shaft speed sensor and the engine-A/T-ECU (earth line), and repair if necessary. <6G7>
● Check the harness between the output shaft speed sensor and the A/T-ECU (earth line), and repair if necessary. <4M4>
NG
Repair
(2)NG
Check the following connector: E-113
OK
● Check the harness between the output shaft speed sensor and the engine-A/T-ECU (earth line), and repair if necessary. <6G7>
● Check the harness between the output shaft speed sensor and the A/T-ECU (sensor line), and repair if necessary. <4M4>
NG
Repair
(3)NG
Check the following connectors: D-208, D-213, D-32, E-115
OK
Check the harness between the output shaft speed sensor and the ignition switch, and repair if necessary.
NG
Repair
OK
Replace the output shaft speed sensor. ★
Check the trouble symptoms.
NG
Check the following connectors: D-208, D-213, D-32, E-115, E-113
NG
Repair
OK
● Check the harness between the output shaft speed sensor and the engine-A/T-ECU. <6G7>
● Check the harness between the output shaft speed sensor and the A/T-ECU. <4M4>
● Check the harness between the output shaft speed sensor and the ignition switch.
NG
Repair
OK
Check the trouble symptoms.
NG
Overhaul the A/T.
● Replace the direct planetary carrier.
Check the trouble symptoms.
NG
Eliminate the cause of the noise.

Code No.25 Wide open throttle switch system	Probable cause
If the wide open throttle switch does not turn OFF when the accelerator pedal is not depressed, there is a short circuit in the wide open throttle switch and diagnosis code No. 25 is output.	● Malfunction of wide open throttle switch ● Malfunction of harness and connectors ● Malfunction of engine-A/T-ECU <6G7> ● Malfunction of A/T-ECU <4M4>

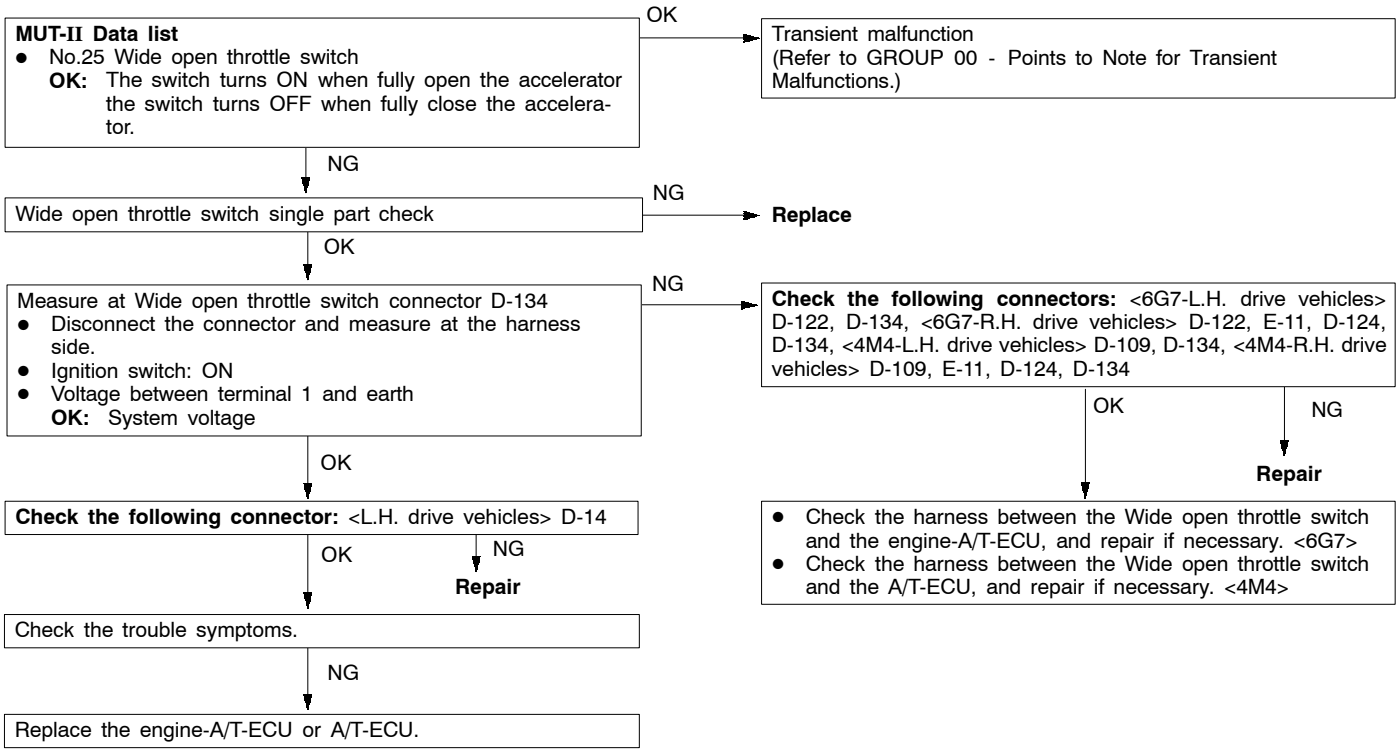

Code No. 26 Stop lamp switch system	Probable cause
If the stop lamp switch is continuously on for 5 minutes or more while the vehicle is being driven, it is judged that there is a short-circuit in the stop lamp switch and code No. 26 is output.	● Malfunction of brake pedal ● Malfunction of stop lamp switch ● Malfunction of harness or connector ● Malfunction of engine-A/T-ECU <6G7> ● Malfunction of A/T-ECU <4M4>

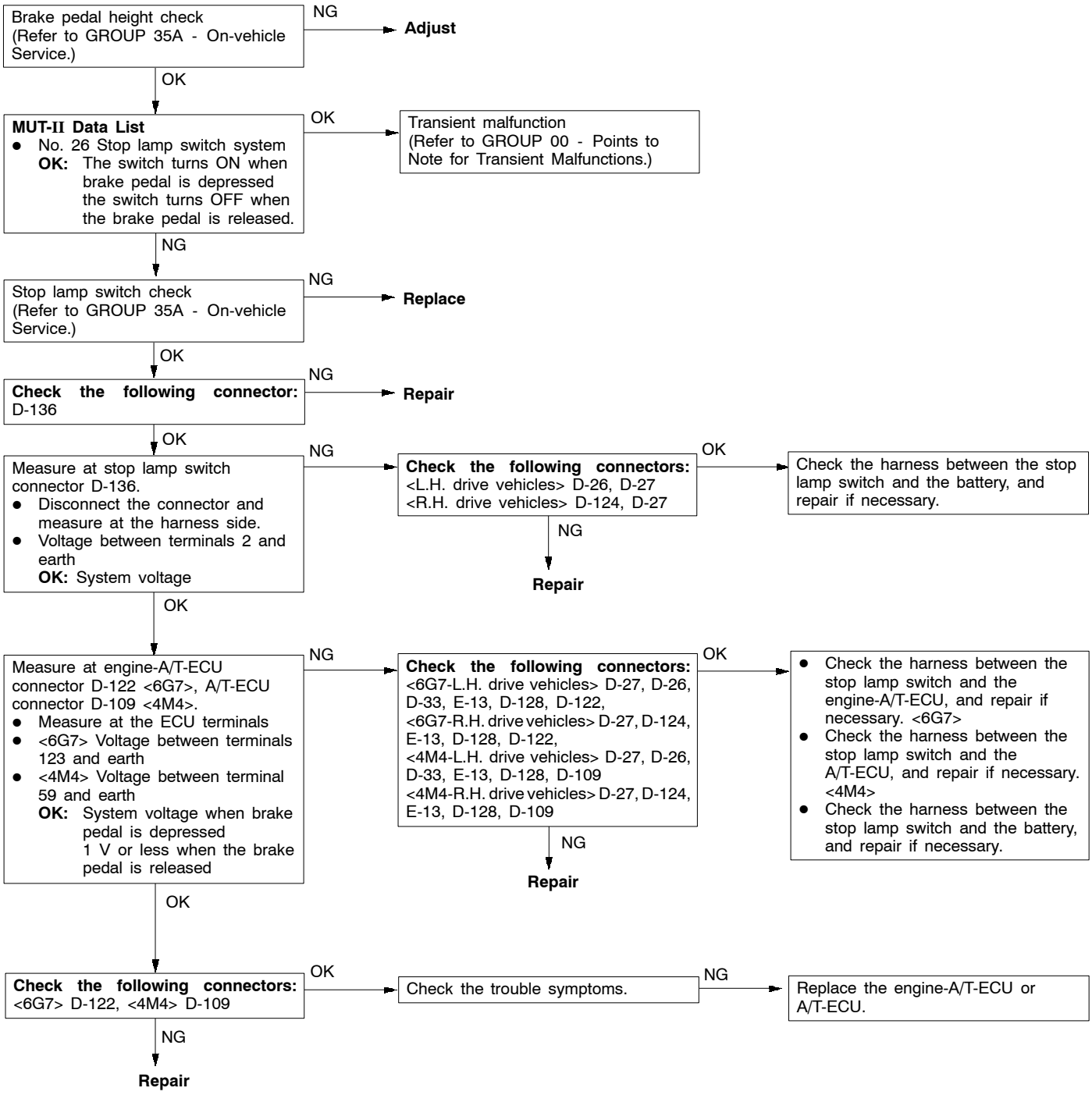

Code No. 31 LR solenoid valve system	Probable cause
If the drive terminal voltage of the LR solenoid valve is 3.0 V or less, it is judged that there is a short-circuit or open circuit in the LR solenoid valve, and the corresponding code is output. The transmission will be fixed in 3rd as a fail-safe measure, and the N range indicator will flash at a rate of 1 Hz.	● Malfunction of LR solenoid valve ● Malfunction of harness or connector ● Malfunction of engine-A/T-ECU <6G7> ● Malfunction of A/T-ECU <4M4>

★ Refer to the Transmission Workshop Manual.

MUT-II Self-Diag Code
- Is code No. 54 output?

YES → Code No. 54 - A/T control relay system check (Refer to P.23-103.)

NO ↓

MUT-II Actuator Test
- No. 1 LR solenoid valve
  OK: Sound of operation can be heard

OK → Transient malfunction (Refer to GROUP 00 - Points to Note for Transient Malfunctions.)

NG ↓

Measure at engine-A/T-ECU connector D-122 <6G7>, or at A/T-ECU connector D-109 <4M4>.
- Measure at the ECU terminals
- Ignition switch: ON
- <6G7> Voltage between terminal 129 and earth
- <4M4> Voltage between terminal 62 and earth
  OK: System voltage

NG → **Check the following connectors:** <6G7> D-122, <4M4> D-109
- OK → Check the trouble symptoms.
  - NG → Replace the engine-A/T-ECU or A/T-ECU.
- NG → **Repair**

OK ↓

Check the following connector: C-04

NG → **Repair**

OK ↓

Measure at solenoid valve assembly connector C-04.
- Disconnect the connector and measure at the solenoid valve side.
- Resistance between terminals 6 and 10
  OK: 2.7 - 3.4 Ω

NG → Replace the LR solenoid valve ★

OK ↓

Measure at solenoid valve assembly connector C-04.
- Disconnect the connector and measure at the harness side.
- Ignition switch: ON
- Voltage between terminal 10 and earth
  OK: System voltage

NG → **Check the following connectors:** E-113, D-12
- OK → Check the harness between the solenoid valve assembly and the A/T control relay, and repair if necessary.
- NG → **Repair**

OK ↓

Check the following connectors: <6G7> D-122, E-113, D-12 <4M4> D-109, E-113, D-12

NG → **Repair**

OK ↓

- Check the harness between the solenoid valve assembly and the engine-A/T-ECU, and repair if necessary. <6G7>
- Check the harness between the solenoid valve assembly and the A/T-ECU, and repair if necessary. <4M4>
- Check the harness between the solenoid valve assembly and the A/T control relay, and repair if necessary.

Code No. 32 UD solenoid valve system	Probable cause
If the drive terminal voltage of the UD solenoid valve is 3.0 V or less, it is judged that there is a short-circuit or open circuit in the UD solenoid valve, and the corresponding code is output. The transmission will be fixed in 3rd as a fail-safe measure, and the N range indicator will flash at a rate of 1 Hz.	● Malfunction of UD solenoid valve ● Malfunction of harness or connector ● Malfunction of engine-A/T-ECU <6G7> ● Malfunction of A/T-ECU <4M4>

★ Refer to the Transmission Workshop Manual.

MUT-II Self-Diag Code
- Is code No. 54 output?

YES → Code No. 54 - A/T control relay system check (Refer to P.23-103.)

NO ↓

MUT-II Actuator Test
- No.2 UD solenoid valve
  OK: Sound of operation can be heard

OK → Transient malfunction (Refer to GROUP 00 - Points to Note for Transient Malfunctions.)

NG ↓

Measure at engine-A/T-ECU connector D-122 <6G7>, or at A/T-ECU connector D-107 <4M4>.
- Measure at the ECU terminals
- Ignition switch: ON
- <6G7> Voltage between terminal 120 and earth
- <4M4> Voltage between terminal 1 and earth
  OK: System voltage

NG → **Check the following connectors:** <6G7> D-122, <4M4> D-107
- OK → Check the trouble symptoms.
  - NG → Replace the engine-A/T-ECU or A/T-ECU.
- NG → **Repair**

OK ↓

Check the following connector: C-04

NG → **Repair**

OK ↓

Measure at solenoid valve assembly connector C-04.
- Disconnect the connector and measure at the solenoid valve side.
- Resistance between terminals 3 and 9
  OK: 2.7 - 3.4 Ω

NG → Replace the UD solenoid valve. ★

OK ↓

Measure at solenoid valve assembly connector C-04.
- Disconnect the connector and measure at the harness side.
- Ignition switch: ON
- Voltage between terminals 9 and earth
  OK: System voltage

NG → **Check the following connectors:** E-113, D-12
- OK → Check the harness between the solenoid valve assembly and the A/T control relay, and repair if necessary.
- NG → **Repair**

OK ↓

Check the following connectors: <6G7> D-122, E-113, D-12, <4M4> D-107, E-113, D-12

NG → **Repair**

OK ↓

- Check the harness between the solenoid valve assembly and the engine-A/T-ECU, and repair if necessary. <6G7>
- Check the harness between the solenoid valve assembly and the A/T-ECU, and repair if necessary. <4M4>
- Check the harness between the solenoid valve assembly and the A/T control relay, and repair if necessary.

Code No. 33 2nd solenoid valve system	Probable cause
If the drive terminal voltage of the 2nd solenoid valve is 3.0 V or less, it is judged that there is a short-circuit or open circuit in the 2nd solenoid valve, and the corresponding code is output. The transmission will be fixed in 3rd as a fail-safe measure, and the N range indicator will flash at a rate of 1 Hz.	● Malfunction of 2nd solenoid valve ● Malfunction of harness or connector ● Malfunction of engine-A/T-ECU <6G7> ● Malfunction of A/T-ECU <4M4>

★ Refer to the Transmission Workshop Manual.

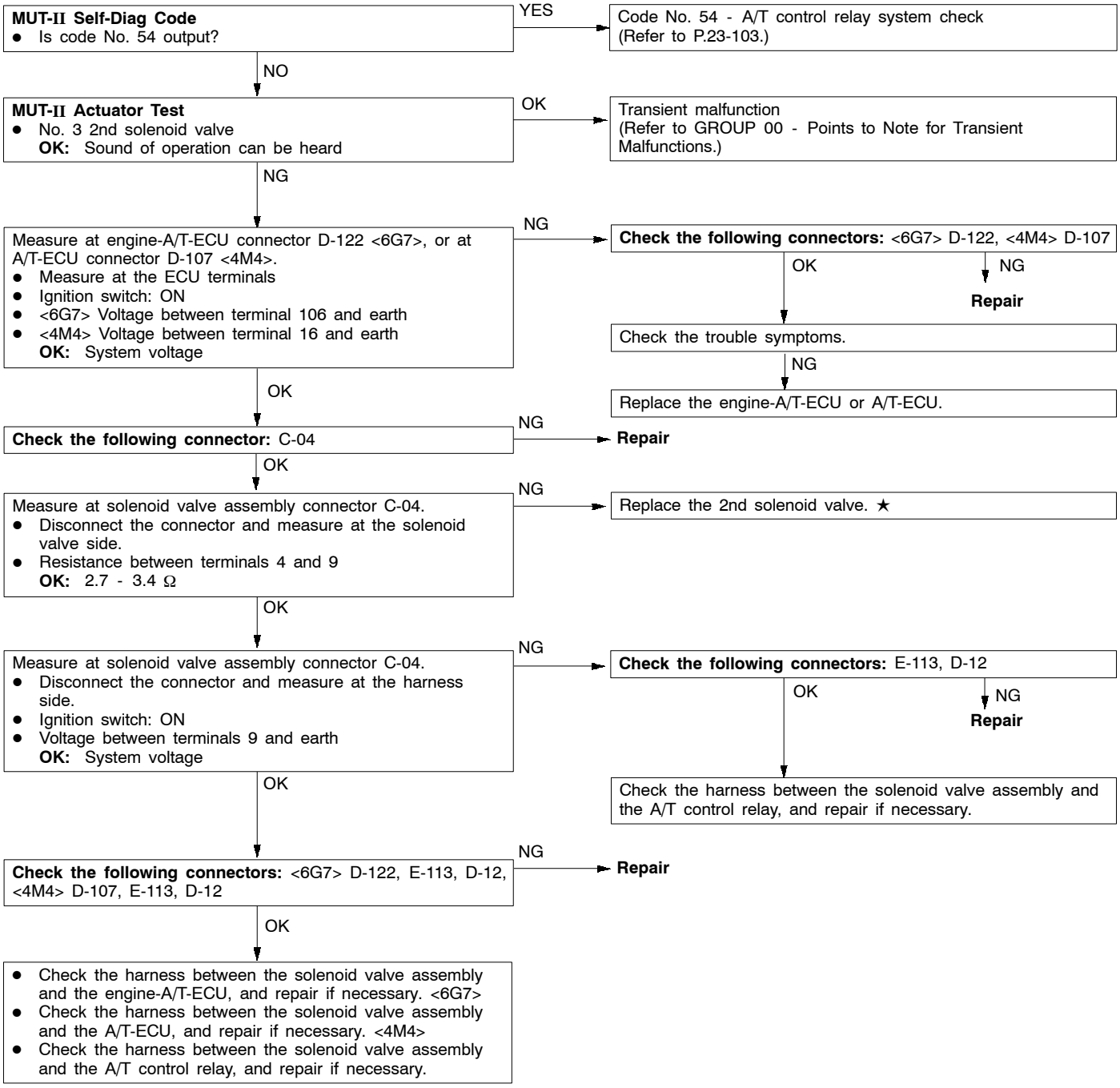

Code No. 34 OD solenoid valve system	Probable cause
If the drive terminal voltage of the OD solenoid valve is 3.0 V or less, it is judged that there is a short-circuit or open circuit in the OD solenoid valve, and the corresponding code is output. The transmission will be fixed in 3rd as a fail-safe measure, and the N range indicator will flash at a rate of 1 Hz.	● Malfunction of OD solenoid valve ● Malfunction of harness or connector ● Malfunction of engine-A/T-ECU <6G7> ● Malfunction of A/T-ECU <4M4>

★ Refer to the Transmission Workshop Manual.

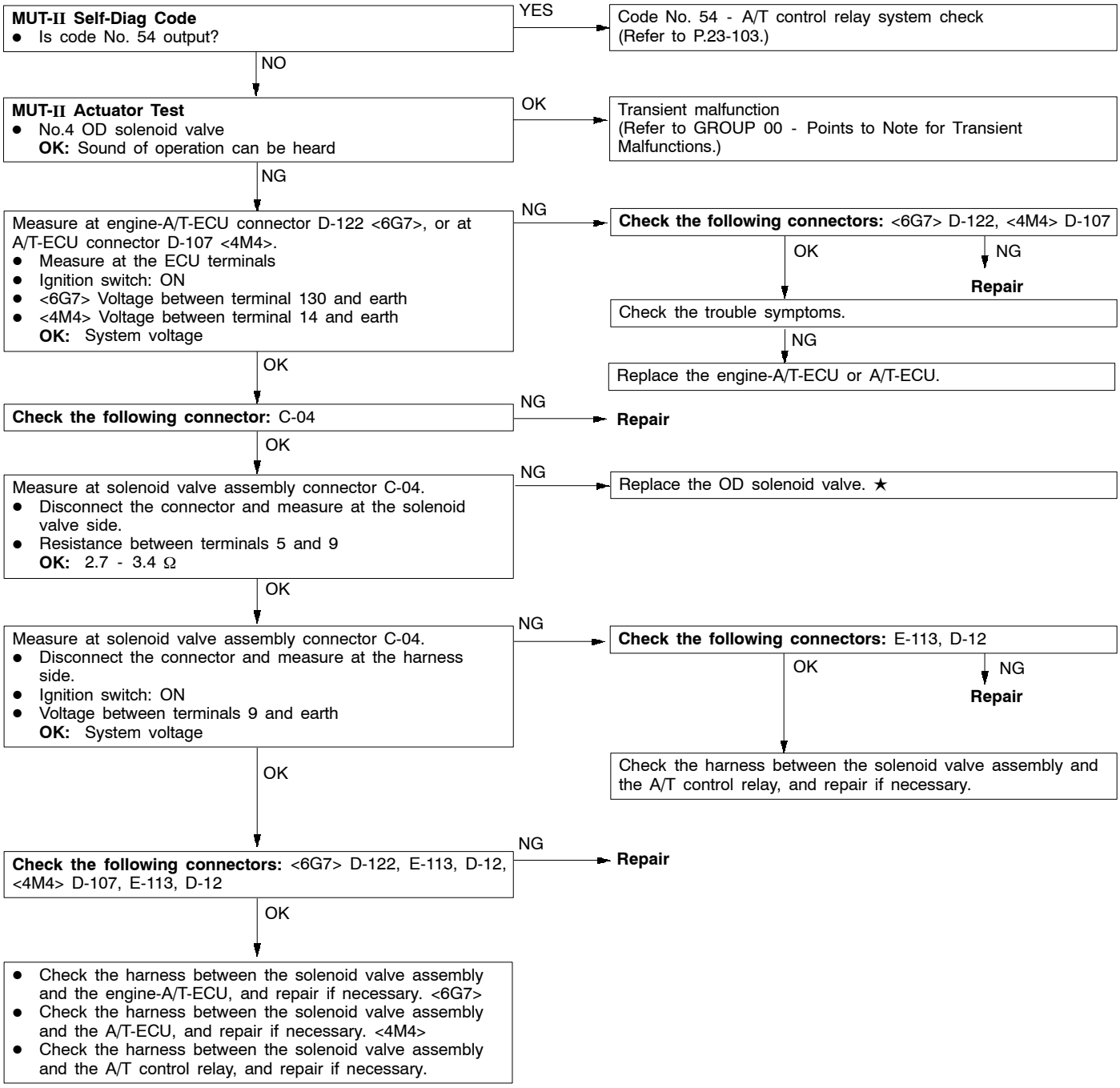

Code No. 35 RED solenoid valve system	Probable cause
If the drive terminal voltage of the RED solenoid valve is 3.0 V or less, it is judged that there is a short-circuit or open circuit in the RED solenoid valve, and the corresponding code is output. The transmission will be fixed in 3rd as a fail-safe measure, and the N range indicator will flash at a rate of 1 Hz.	● Malfunction of RED solenoid valve ● Malfunction of harness or connector ● Malfunction of engine-A/T-ECU <6G7> ● Malfunction of A/T-ECU <4M4>

★ Refer to the Transmission Workshop Manual.

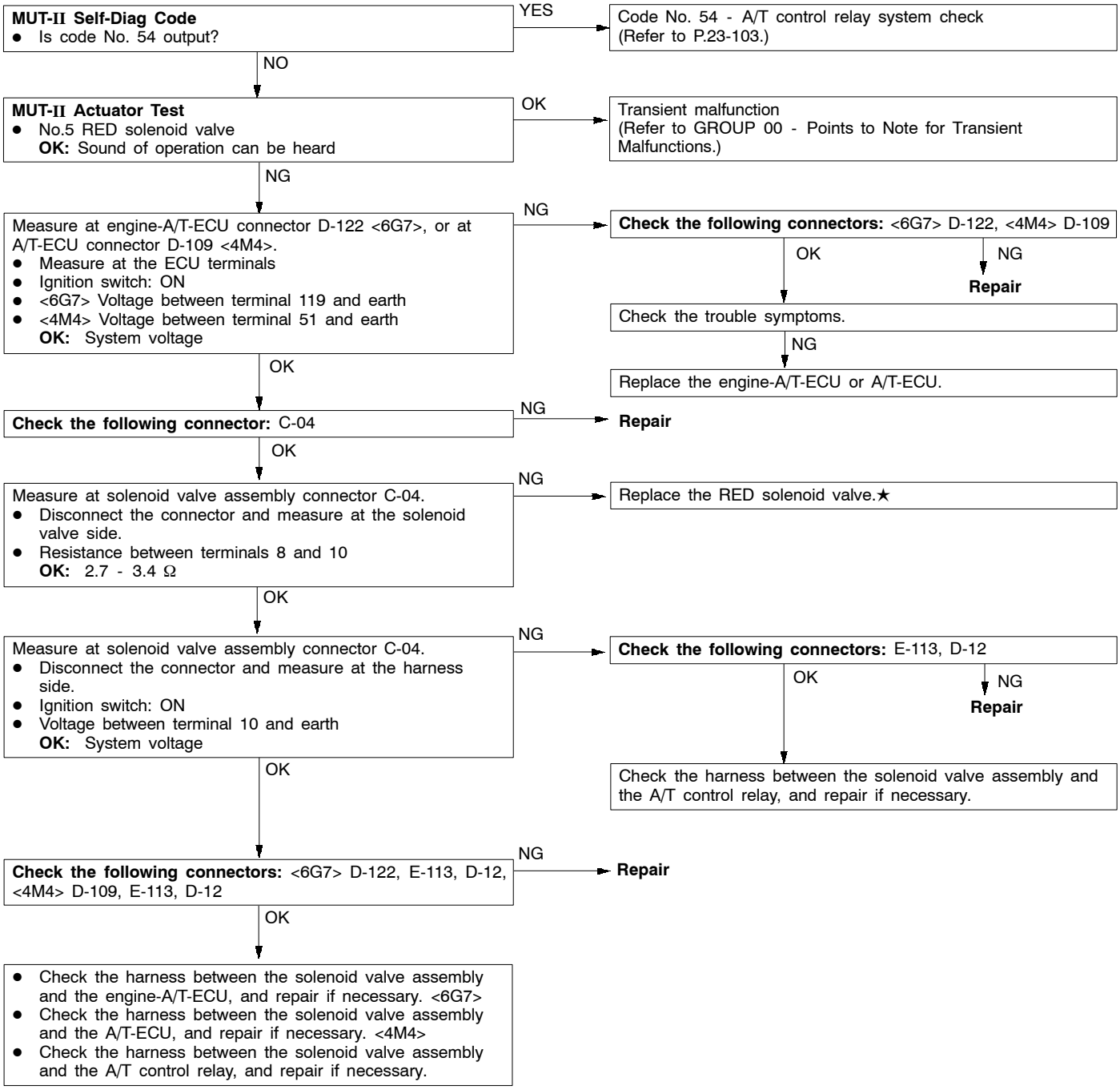

Code No. 36 DCC solenoid valve system	Probable cause
If the drive terminal voltage of the DCC solenoid valve is 3.0 V or less, it is judged that there is a short-circuit or open circuit in the DCC solenoid valve, and code No. 36 is output. The transmission will be fixed in 3rd as a fail-safe measure, and the N range indicator will flash at a rate of 1 Hz.	● Malfunction of DCC solenoid valve ● Malfunction of harness or connector ● Malfunction of engine-A/T-ECU <6G7> ● Malfunction of A/T-ECU <4M4>

★ Refer to the Transmission Workshop Manual.

MUT-II Self-Diag Code
- Is code No. 54 output?

YES → Code No. 54 - A/T control relay system check (Refer to P.23-103.)

NO ↓

MUT-II Actuator Test
- No. 6 DCC solenoid valve
  OK: Sound of operation can be heard

OK → Transient malfunction (Refer to GROUP 00 - Points to Note for Transient Malfunctions.)

NG ↓

Measure at engine-A/T-ECU connector D-122 <6G7>, or at A/T-ECU connector D-107 <4M4>.
- Measure at the ECU terminals.
- Ignition switch: ON
- <6G7> Voltage between terminal 107 and earth
- <4M4> Voltage between terminal 15 and earth
  OK: System voltage

NG → **Check the following connectors:** <6G7> D-122, <4M4> D-107
- OK → Check the trouble symptoms.
  - NG → Replace the engine-A/T-ECU or A/T-ECU.
- NG → **Repair**

OK ↓

Check the following connector: C-04

NG → **Repair**

OK ↓

Measure at solenoid valve assembly connector C-04.
- Disconnect the connector and measure at the solenoid valve side.
- <4M4> Resistance between terminal 7 and 10
  OK: 2.7 - 3.4 Ω

NG → Replace the DCC solenoid valve. ★

OK ↓

Measure at solenoid valve assembly connector C-04.
- Disconnect the connector and measure at the harness side.
- Ignition switch: ON
- Voltage between terminal 10 and earth
  OK: System voltage

NG → **Check the following connectors:** E-113, D-12
- OK → Check the harness between the solenoid valve assembly and the A/T control relay, and repair if necessary.
- NG → **Repair**

OK ↓

Check the following connectors: <6G7> D-122, E-113, D-12, <4M4> D-107, E-113, D-12

NG → **Repair**

OK ↓

- Check the harness between the solenoid valve assembly and the engine-A/T-ECU, and repair if necessary. <6G7>
- Check the harness between the solenoid valve assembly and the A/T-ECU, and repair if necessary. <4M4>
- Check the harness between the solenoid valve assembly and the A/T control relay, and repair if necessary.

Code No.41 1st without completion of shifting	Probable cause
If the output shaft speed sensor output multiplied by the 1st gear ratio is not identical to the input shaft speed sensor output after shifting to 1st, code No. 41 is output. If code No. 41 is output 4 times, the transmission is fixed in 3rd and the N range lamp flashes at a rate of 1 Hz.	● Malfunction of input shaft speed sensor ● Malfunction of output shaft speed sensor ● Malfunction of harness or connector ● Malfunction of solenoid valve ● Malfunction of reverse clutch retainer ● Malfunction of direct planetary carrier ● Malfunction of LR brake system ● Malfunction of UD clutch system ● Malfunction of RED brake system ● Malfunction of one-way clutch system ● Malfunction of engine-A/T-ECU <6G7> ● Malfunction of A/T-ECU <4M4> ● Noise is generated.

★ Refer to the Transmission Workshop Manual.

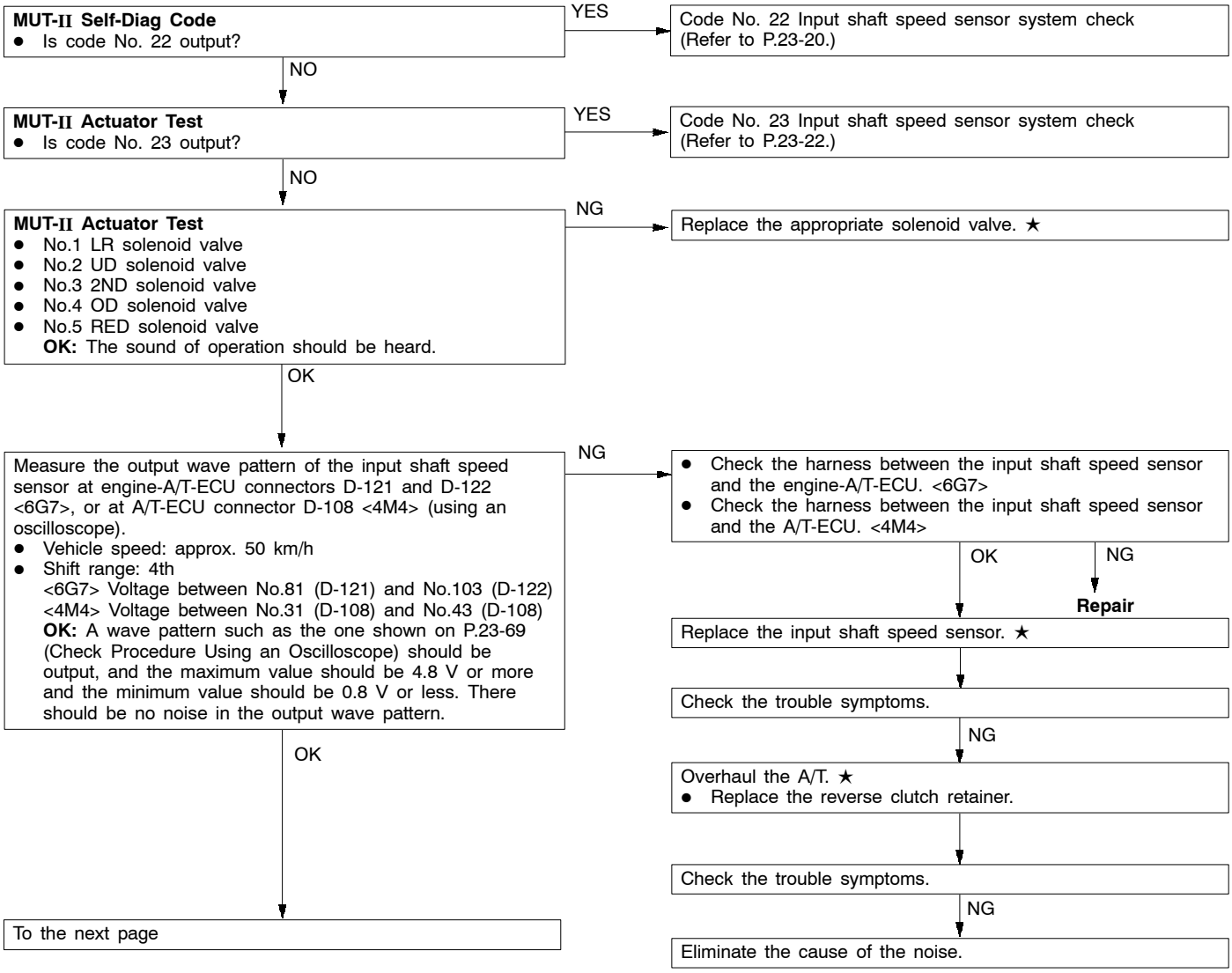

To the next page

OK

Measure the output wave pattern of the output shaft speed sensor at engine-A/T-ECU connectors D-121 and D-122 <6G7>, or at A/T-ECU connector D-108 <4M4> (using an oscilloscope).
- Vehicle speed: approx. 50 km/h
- Shift range: 4th
  <6G7> Voltage between No.81 (D-121) and No.104 (D-122)
  <4M4> Voltage between No.32 (D-108) and No.43 (D-108)
  OK: A wave pattern such as the one shown on P.23-69 (Check Procedure Using an Oscilloscope) should be output, and the maximum value should be 4.8 V or more and the minimum value should be 0.8 V or less. There should be no noise in the output wave pattern.

NG →
- Check the harness between the output shaft speed sensor and the engine-A/T-ECU. <6G7>
- Check the harness between the output shaft speed sensor and the A/T-ECU. <4M4>

OK → NG → **Repair**

Replace the output shaft speed sensor. ★

Check the trouble symptoms.

NG

Overhaul the A/T. ★
- Replace the direct planetary carrier.

Check the trouble symptoms.

NG

Eliminate the cause of the noise.

OK

Replace the valve body assembly. ★

Check the trouble symptoms.

NG

Replace the engine-A/T-ECU or A/T-ECU.

Check the trouble symptoms.

NG

Overhaul the A/T. ★
- Replace the UD clutch. (Code No. 42, 43 or No. 44 is output, or no other codes are output.)
- Replace the LR brake. (Code No. 46 is output, or no other codes are output.)
- Replace the RED brake. (Code No. 42, 43 or No. 46 is output, or no other codes are output.)
- Replace the one-way clutch (OWC-L). (No other codes are output.)
- Replace the one-way clutch (OWC-D). (Code No. 42 or No. 43 is output, or no other codes are output.)

Code No. 42 2nd without completion of shifting	Probable cause
If the output shaft speed sensor output multiplied by the 2nd gear ratio is not identical to the input shaft speed sensor output after shifting to 2nd, code No. 42 is output. If code No. 42 is output 4 times, the transmission is fixed in 3rd and the N range lamp flashes at a rate of 1 Hz.	● Malfunction of input shaft speed sensor ● Malfunction of output shaft speed sensor ● Malfunction of harness or connector ● Malfunction of solenoid valve ● Malfunction of reverse clutch retainer ● Malfunction of direct planetary carrier ● Malfunction of 2ND brake system ● Malfunction of UD clutch system ● Malfunction of RED brake system ● Malfunction of one-way clutch system ● Malfunction of engine-A/T-ECU <6G7> ● Malfunction of A/T-ECU <4M4> ● Noise is generated.

★ Refer to the Transmission Workshop Manual.

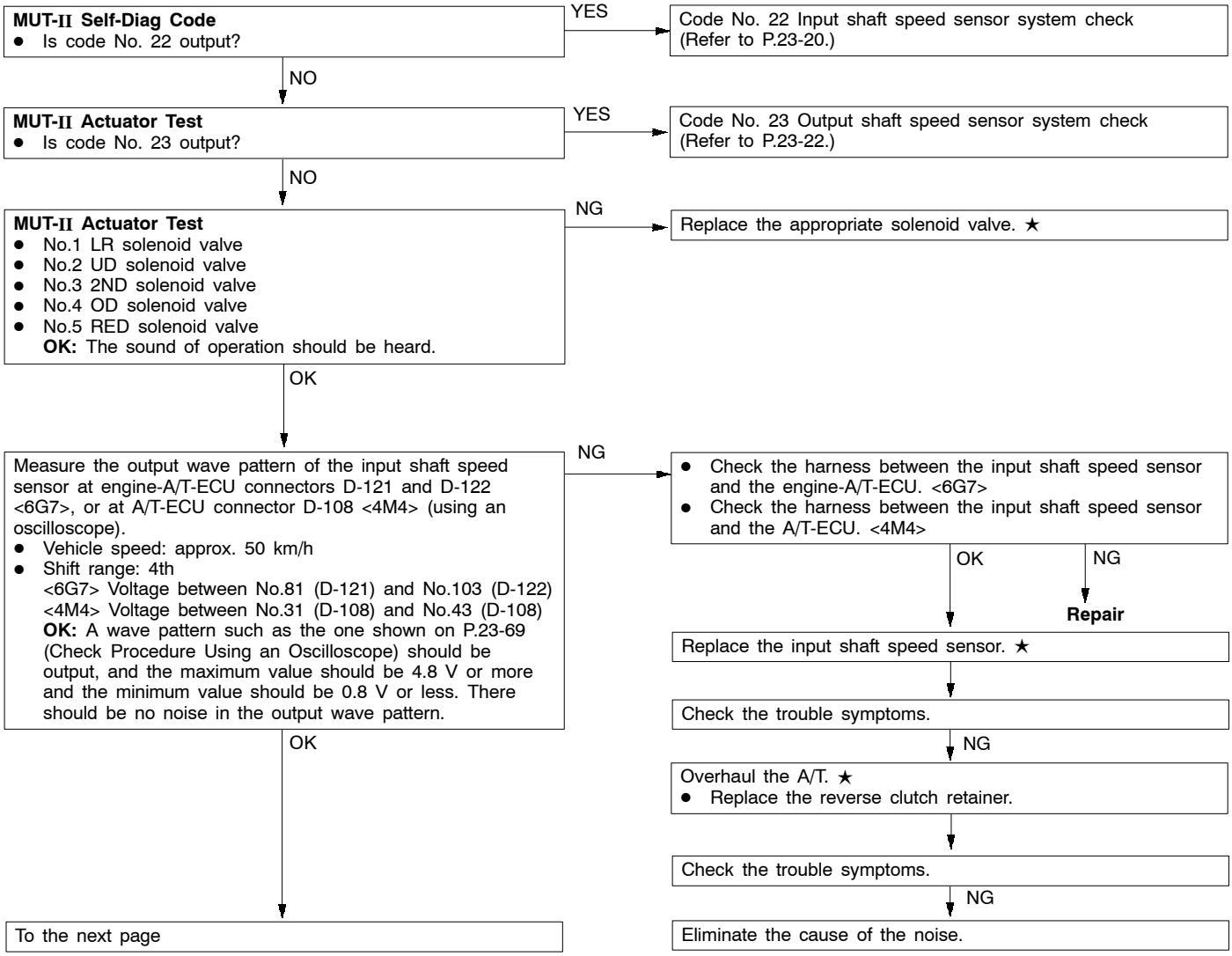

From the previous page

OK

Measure the output wave pattern of the output shaft speed sensor at engine-A/T-ECU connectors D-121 and D-122 <6G7>, or at A/T-ECU connector D-108 <4M4> (using an oscilloscope).
- Vehicle speed: approx. 50 km/h
- Shift range: 4th
  <6G7> Voltage between No.81 (D-121) and No.104 (D-122)
  <4M4> Voltage between No.32 (D-108) and No.43 (D-108)
  OK: A wave pattern such as the one shown on P.23-69 (Check Procedure Using an Oscilloscope) should be output, and the maximum value should be 4.8 V or more and the minimum value should be 0.8 V or less. There should be no noise in the output wave pattern.

NG →
- Check the harness between the output shaft speed sensor and the engine-A/T-ECU. <6G7>
- Check the harness between the output shaft speed sensor and the A/T-ECU. <4M4>

OK → NG → **Repair**

Replace the output shaft speed sensor. ★

Check the trouble symptoms.

NG

Overhaul the A/T. ★
- Replace the direct planetary carrier.

Check the trouble symptoms.

NG

Eliminate the cause of the noise.

OK

Replace the valve body assembly. ★

Check the trouble symptoms.

NG

Replace the engine-A/T-ECU or A/T-ECU.

Check the trouble symptoms.

NG

Overhaul the A/T. ★
- Replace the UD clutch. (Code No. 41, 43 or No. 44 is output, or no other codes are output.)
- Replace the 2ND brake. (Code No. 44 or No. 45 is output, or no other codes are output.)
- Replace the RED brake. (Code No. 41, 43 or No. 46 is output, or no other codes are output.)
- Replace the one-way clutch (OWC-D). (Code No. 41 or No. 43 is output, or no other codes are output.)

Code No.43 3rd without completion of shifting	Probable cause
If the output shaft speed sensor output multiplied by the 3rd gear ratio is not identical to the input shaft speed sensor output after shifting to 3rd, code No. 43 is output. If code No. 43 is output 4 times, the transmission is fixed in 3rd and the N range lamp flashes at a rate of 1 Hz.	● Malfunction of input shaft speed sensor ● Malfunction of output shaft speed sensor ● Malfunction of harness or connector ● Malfunction of solenoid valve ● Malfunction of reverse clutch retainer ● Malfunction of direct planetary carrier ● Malfunction of UD clutch system ● Malfunction of OD clutch system ● Malfunction of RED brake system ● Malfunction of one-way clutch system ● Malfunction of engine-A/T-ECU <6G7> ● Malfunction of A/T-ECU <4M4> ● Noise is generated.

★ Refer to the Transmission Workshop Manual.

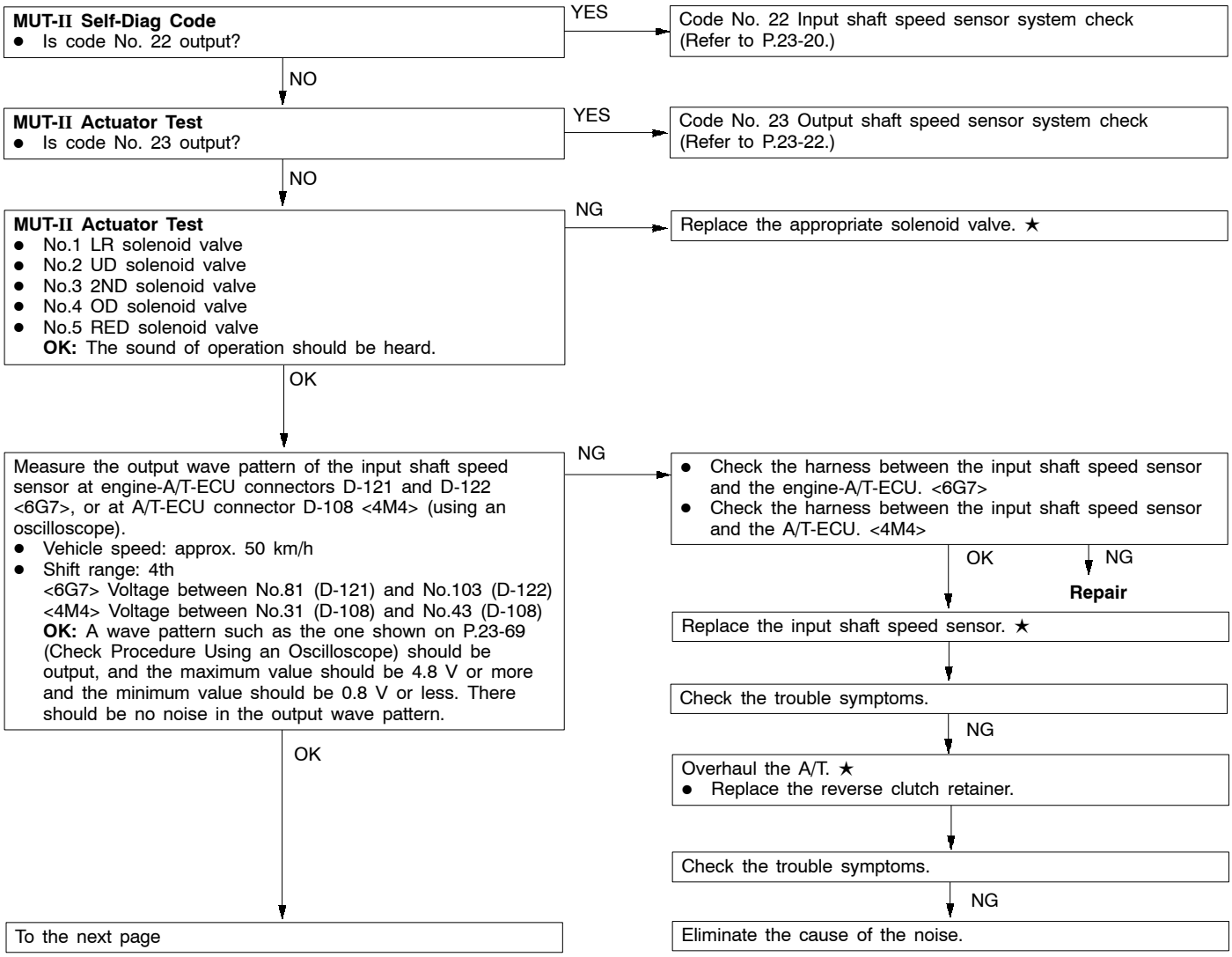

To the next page

OK

Measure the output wave pattern of the output shaft speed sensor at engine-A/T-ECU connectors D-121 and D-122 <6G7>, or at A/T-ECU connector D-108 <4M4> (using an oscilloscope).
- Vehicle speed: approx. 50 km/h
- Shift range: 4th
  <6G7>Voltage between No.81 (D-121) and No.104 (D-122)
  <4M4> Voltage between No.32 (D-108) and No.43 (D-108)
  OK: A wave pattern such as the one shown on P.23-69 (Check Procedure Using an Oscilloscope) should be output, and with the maximum value should be 4.8 V or more and the minimum value should be 0.8 V or less. There should be no noise in the output wave pattern.

NG

- Check the harness between the output shaft speed sensor and the engine-A/T-ECU. <6G7>
- Check the harness between the output shaft speed sensor and the A/T-ECU. <4M4>

OK

NG → **Repair**

Replace the output shaft speed sensor. ★

Check the trouble symptoms.

NG

Overhaul the A/T. ★
- Replace the direct planetary carrier.

Check the trouble symptoms.

NG

Eliminate the cause of the noise.

OK

Replace the valve body assembly. ★

Check the trouble symptoms.

NG

Replace the engine-A/T-ECU or A/T-ECU.

Check the trouble symptoms.

NG

Overhaul the A/T. ★
- Replace the UD clutch. (Code No. 41, 42 or No. 44 is output, or no other codes are output.)
- Replace the OD clutch. (Code No. 44 or No. 45 is output, or no other codes are output.)
- Replace the RED brake. (Code No. 41, 42 or No. 46 is output, or no other codes are output.)
- Replace the one-way clutch (OWC-D). (Code No. 41 or No. 42 is output, or no other codes are output.)

Code No.44 4th without completion of shifting	Probable cause
If the output shaft speed sensor output multiplied by the 4th gear ratio is not identical to the input shaft speed sensor output after shifting to 4th, code No. 44 is output. If code No. 44 is output 4 times, the transmission is fixed in 3rd and the N range lamp flashes at a rate of 1 Hz.	● Malfunction of input shaft speed sensor ● Malfunction of output shaft speed sensor ● Malfunction of harness or connector ● Malfunction of solenoid valve ● Malfunction of reverse clutch retainer ● Malfunction of direct planetary carrier ● Malfunction of UD clutch system ● Malfunction of 2ND brake system ● Malfunction of OD clutch system ● Malfunction of DIR clutch system ● Malfunction of engine-A/T-ECU <6G7> ● Malfunction of A/T-ECU <4M4> ● Noise is generated.

★ Refer to the Transmission Workshop Manual.

MUT-II Self-Diag Code
- Is code No. 22 output?

YES → Code No. 22 Input shaft speed sensor system check (Refer to P.23-20.)

NO ↓

MUT-II Actuator Test
- Is code No. 23 output?

YES → Code No. 23 Output shaft speed sensor system check (Refer to P.23-22.)

NO ↓

MUT-II Actuator Test
- No.1 LR solenoid valve
- No.2 UD solenoid valve
- No.3 2ND solenoid valve
- No.4 OD solenoid valve
- No.5 RED solenoid valve

OK: The sound of operation should be heard.

NG → Replace the appropriate solenoid valve. ★

OK ↓

Measure the output wave pattern of the input shaft speed sensor at engine-A/T-ECU connectors D-121 and D-122 <6G7>, or at A/T-ECU connector D-108 <4M4> (using an oscilloscope).
- Vehicle speed: approx. 50 km/h
- Shift range: 4th

<6G7> Voltage between No.81 (D-121) and No.103 (D-122)
<4M4> Voltage between No.31 (D-108) and No.43 (D-108)
OK: A wave pattern such as the one shown on P.23-69 (Check Procedure Using an Oscilloscope) should be output, and the maximum value should be 4.8 V or more and the minimum value should be 0.8 V or less. There should be no noise in the output wave pattern.

NG →
- Check the harness between the input shaft speed sensor and the engine-A/T-ECU. <6G7>
- Check the harness between the input shaft speed sensor and the A/T-ECU. <4M4>

OK ↓ NG → **Repair**

Replace the input shaft speed sensor. ★

↓

Check the trouble symptoms.

NG ↓

Overhaul the A/T. ★
- Replace the reverse clutch retainer.

↓

Check the trouble symptoms.

NG ↓

Eliminate the cause of the noise.

OK ↓

To the next page

From the previous page

OK

Measure the output wave pattern of the output shaft speed sensor at engine-A/T-ECU connectors D-121 and D-122 <6G7>, or at A/T-ECU connector D-108 <4M4> (using an oscilloscope).
- Vehicle speed: approx. 50 km/h
- Shift range: 4th
  <6G7> Voltage between No.81 (D-121) and No.104 (D-122)
  <4M4> Voltage between No.32 (D-108) and No.43 (D-108)
  OK: A wave pattern such as the one shown on P.23-69 (Check Procedure Using an Oscilloscope) should be output, and the maximum value should be 4.8 V or more and the minimum value should be 0.8 V or less. There should be no noise in the output wave pattern.

NG →
- Check the harness between the output shaft speed sensor and the engine-A/T-ECU. <6G7>
- Check the harness between the output shaft speed sensor and the A/T-ECU. <4M4>

OK → NG → **Repair**

Replace the output shaft speed sensor. ★

Check the trouble symptoms.

NG

Overhaul the A/T. ★
- Replace the direct planetary carrier.

Check the trouble symptoms.

NG

Eliminate the cause of the noise.

OK

Replace the valve body assembly. ★

Check the trouble symptoms.

NG

Replace the engine-A/T-ECU or A/T-ECU.

Check the trouble symptoms.

NG

Overhaul the A/T. ★
- Replace the UD clutch. (Code No. 41, 42 or No. 43 is output, or no other codes are output.)
- Replace the OD clutch. (Code No. 43 or No. 45 is output, or no other codes are output.)
- Replace the DIR clutch. (Code No. 45 is output, or no other codes are output.)

Code No.45 5th without completion of shifting	Probable cause
If the output shaft speed sensor output multiplied by the 5th gear ratio is not identical to the input shaft speed sensor output after shifting to 5th, code No. 45 is output. If code No. 45 is output 4 times, the transmission is fixed in 3rd and the N range lamp flashes at a rate of 1 Hz.	● Malfunction of input shaft speed sensor ● Malfunction of output shaft speed sensor ● Malfunction of harness or connector ● Malfunction of solenoid valve ● Malfunction of reverse clutch retainer ● Malfunction of direct planetary carrier ● Malfunction of 2ND brake system ● Malfunction of OD clutch system ● Malfunction of DIR clutch system ● Malfunction of engine-A/T-ECU <6G7> ● Malfunction of A/T-ECU. <4M4> ● Noise is generated.

★ Refer to the Transmission Workshop Manual.

MUT-II Self-Diag Code
- Is code No. 22 output?

YES → Code No. 22 Input shaft speed sensor system check (Refer to P.23-20.)

NO ↓

MUT-II Actuator Test
- Is code No. 23 output?

YES → Code No. 23 Output shaft speed sensor system check (Refer to P.23-22.)

NO ↓

MUT-II Actuator Test
- No.1 LR solenoid valve
- No.2 UD solenoid valve
- No.3 2ND solenoid valve
- No.4 OD solenoid valve
- No.5 RED solenoid valve

OK: The sound of operation should be heard.

NG → Replace the appropriate solenoid valve. ★

OK ↓

Measure the output wave pattern of the input shaft speed sensor at engine-A/T-ECU connectors D-121 and D-122 <6G7>, or at A/T-ECU connector D-108 <4M4> (using an oscilloscope).
- Vehicle speed: approx. 50 km/h
- Shift range: 4th

<6G7> Voltage between No.81 (D-121) and No.103 (D-122)
<4M4> Voltage between No.31 (D-108) and No.43 (D-108)
OK: A wave pattern such as the one shown on P.23-69 (Check Procedure Using an Oscilloscope) should be output, and the maximum value should be 4.8 V or more and the minimum value should be 0.8 V or less. There should be no noise in the output wave pattern.

NG →
- Check the harness between the input shaft speed sensor and the engine-A/T-ECU. <6G7>
- Check the harness between the input shaft speed sensor and the A/T-ECU. <4M4>

OK ↓ / NG → **Repair**

Replace the input shaft speed sensor. ★

↓

Check the trouble symptoms.

NG ↓

Overhaul the A/T. ★
- Replace the reverse clutch retainer.

↓

Check the trouble symptoms.

NG ↓

Eliminate the cause of the noise.

OK ↓

To the next page

From the previous page

OK

Measure the output wave pattern of the output shaft speed sensor at engine-A/T-ECU connectors D-121 and D-122 <6G7>, or at A/T-ECU connector D-108 <4M4> (using an oscilloscope).
- Vehicle speed: approx. 50 km/h
- Shift range: 4th
  <6G7> Voltage between No.81 (D-121) and No.104 (D-122)
  <4M4> Voltage between No.32 (D-108) and No.43 (D-108)
  OK: A wave pattern such as the one shown on P.23-69 (Check Procedure Using an Oscilloscope) should be output, and the maximum value should be 4.8 V or more and the minimum value should be 0.8 V or less. There should be no noise in the output wave pattern.

NG →
- Check the harness between the output shaft speed sensor and the engine-A/T-ECU. <6G7>
- Check the harness between the output shaft speed sensor and the A/T-ECU. <4M4>

OK → NG → **Repair**

Replace the output shaft speed sensor. ★

Check the trouble symptoms.

NG

Overhaul the A/T. ★
- Replace the direct planetary carrier.

Check the trouble symptoms.

NG

Eliminate the cause of the noise.

OK

Replace the valve body assembly. ★

Check the trouble symptoms.

NG

Replace the engine-A/T-ECU or A/T-ECU.

Check the trouble symptoms.

NG

Overhaul the A/T. ★
- Replace the OD clutch. (Code No. 43 or No. 44 is output, or no other codes are output.)
- Replace the 2ND brake. (Code No. 42 is output, or no other codes are output.)
- Replace the DIR clutch. (Code No. 44 is output, or no other codes are output.)

Code No. 46 Reverse without completion of shifting	Probable cause
If the output shaft speed sensor output multiplied by the reverse gear ratio is not identical to the input shaft speed sensor output after shifting to reverse, code No. 46 is output. If code No. 46 is output 4 times, the transmission is fixed in 3rd and the N range lamp flashes at a rate of 1 Hz.	● Malfunction of input shaft speed sensor ● Malfunction of output shaft speed sensor ● Malfunction of harness or connector ● Malfunction of solenoid valve ● Malfunction of reverse clutch retainer ● Malfunction of direct planetary carrier ● Malfunction of LR brake system ● Malfunction of REV clutch system ● Malfunction of RED clutch system ● Malfunction of engine-A/T-ECU <6G7> ● Malfunction of A/T-ECU <4M4> ● Noise is generated.

★ Refer to the Transmission Workshop Manual.

MUT-II Self-Diag Code
- Is code No. 22 output?

YES → Code No. 22 Input shaft speed sensor system check (Refer to P.23-20.)

NO ↓

MUT-II Actuator Test
- Is code No. 23 output?

YES → Code No. 23 Output shaft speed sensor system check (Refer to P.23-22.)

NO ↓

MUT-II Actuator Test
- No.1 LR solenoid valve
- No.2 UD solenoid valve
- No.3 2ND solenoid valve
- No.4 OD solenoid valve
- No.5 RED solenoid valve

OK: The sound of operation should be heard.

NG → Replace the appropriate solenoid valve. ★

OK ↓

Measure the output wave pattern of the input shaft speed sensor at engine-A/T-ECU connectors D-121 and D-122 <6G7>, or at A/T-ECU connector D-108 <4M4> (using an oscilloscope).
- Vehicle speed: approx. 50 km/h
- Shift range: 4th

<6G7> Voltage between No.81 (D-121) and No.103 (D-122)
<4M4> Voltage between No.31 (D-108) and No.43 (D-108)
OK: A wave pattern such as the one shown on P.23-69 (Check Procedure Using an Oscilloscope) should be output, and the maximum value should be 4.8 V or more and the minimum value should be 0.8 V or less. There should be no noise in the output wave pattern.

NG →
- Check the harness between the input shaft speed sensor and the engine-A/T-ECU. <6G7>
- Check the harness between the input shaft speed sensor and the A/T-ECU. <4M4>

OK ↓ / NG → **Repair**

Replace the input shaft speed sensor. ★

↓

Check the trouble symptoms.

NG ↓

Overhaul the A/T. ★
- Replace the reverse clutch retainer.

↓

Check the trouble symptoms.

NG ↓

Eliminate the cause of the noise.

OK ↓

To the next page

From the previous page

OK

Measure the output wave pattern of the output shaft speed sensor at engine-A/T-ECU connectors D-121 and D-122 <6G7>, or at A/T-ECU connector D-108 <4M4> (using an oscilloscope).
- Vehicle speed: approx. 50 km/h
- Shift range: 4th
  <6G7> Voltage between No.81 (D-121) and No.104 (D-122)
  <4M4> Voltage between No.32 (D-108) and No.43 (D-108)
  OK: A wave pattern such as the one shown on P.23-69 (Check Procedure Using an Oscilloscope) should be output, and the maximum value should be 4.8 V or more and the minimum value should be 0.8 V or less. There should be no noise in the output wave pattern.

NG →
- Check the harness between the output shaft speed sensor and the engine-A/T-ECU. <6G7>
- Check the harness between the output shaft speed sensor and the A/T-ECU. <4M4>

OK → NG → **Repair**

Replace the output shaft speed sensor. ★

Check the trouble symptoms.

NG

Overhaul the A/T. ★
- Replace the reverse clutch.

Check the trouble symptoms.

NG

Eliminate the cause of the noise.

OK

Replace the valve body assembly. ★

Check the trouble symptoms.

NG

Replace the engine-A/T-ECU or A/T-ECU.

Check the trouble symptoms.

NG

Overhaul the A/T. ★
- Replace the LR brake. (Code No. 41 is output, or no other codes are output.)
- Replace the REV clutch. (No other codes are output.)
  Replace the RED brake. (Code No. 41, 42 or No. 43 is output, or no other codes are output.)

Code No. 51 Communication problem with engine-ECU	Probable cause
If normal communication cannot be carried out successfully for 1 second or more when the ignition switch is at the ON position, the system voltage is 10 V or higher and the engine speed is 450 r/min or higher, code No. 51 is output. Furthermore, code No. 51 is also output if a communication problem with receiving data continues for 4 seconds or more under the same conditions.	• Malfunction of engine-A/T-ECU <6G7> • Malfunction of engine-ECU <4M4> • Malfunction of A/T-ECU <4M4> • Malfunction of harness or connector <4M4>

<6G7>

Malfunction of engine-A/T-ECU

<4M4>

Check the following connectors: D-112, D-109 → NG → **Repair**

OK

Check the harness between the engine-ECU and the A/T-ECU. → NG → **Repair**

OK

Check the trouble symptoms.

NG

Malfunction of A/T-ECU

Check the trouble symptoms. → NG → Replace the engine-ECU.

Code No. 52 Damper clutch control system	Probable cause
If the DCC solenoid valve drive duty ratio is 100% for a continuous period of 4 seconds or more when the damper clutch starts operating, it is judged that there is a problem with the damper clutch control system, and code No. 52 is output.	● Malfunction of input shaft speed sensor ● Malfunction of DCC solenoid valve ● Malfunction of harness or connector ● Malfunction of reverse clutch retainer ● Malfunction of engine-A/T-ECU <6G7> ● Malfunction of A/T-ECU <4M4> ● Malfunction of torque converter

★ Refer to the Transmission Workshop Manual.

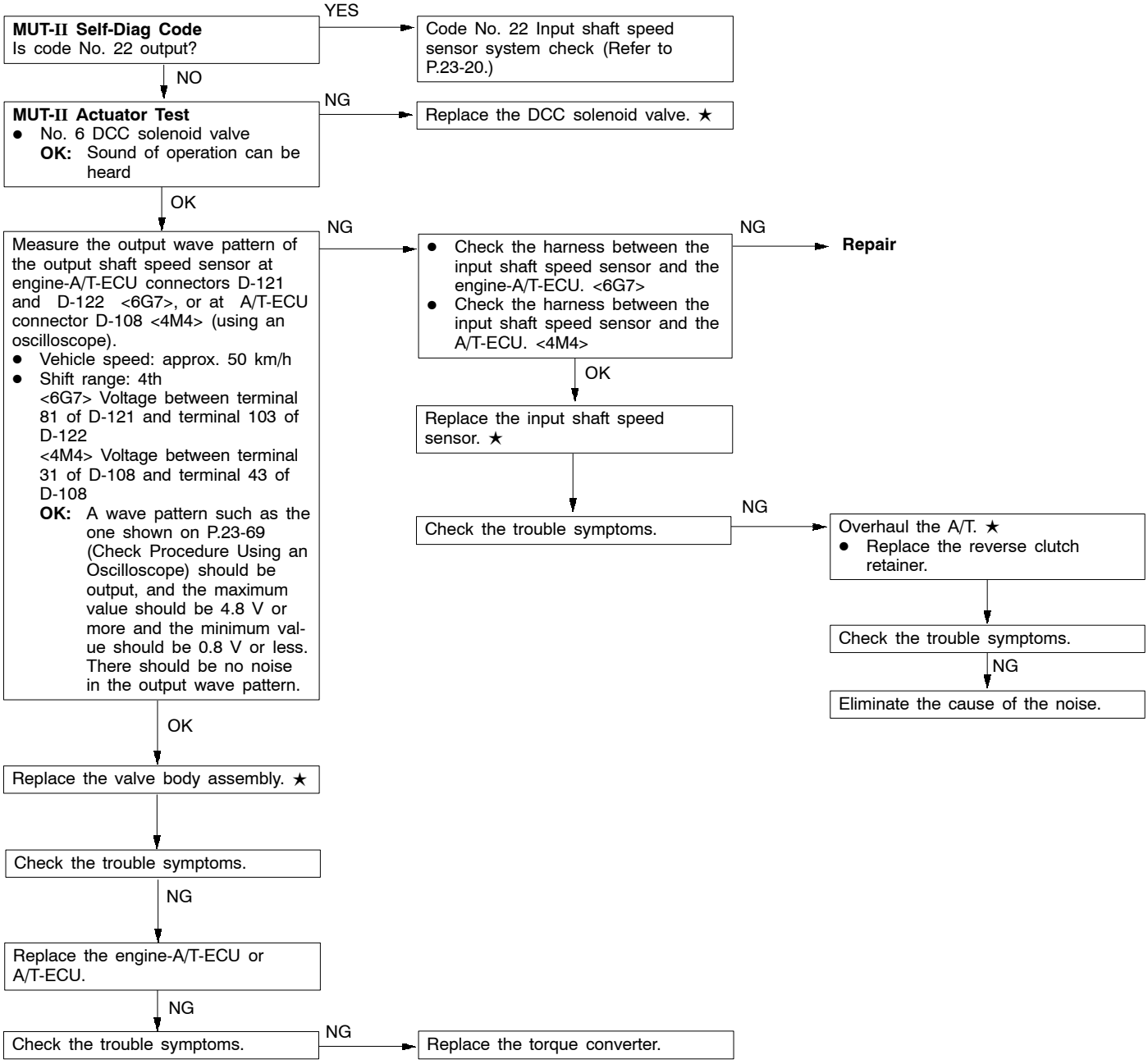

Code No. 54 A/T control relay system	Probable cause
If the A/T control relay voltage is less than 7 V after the ignition switch is turned to the ON position, it is judged that there is a short-circuit to earth or open circuit in the A/T control relay, and code No. 54 is output. The transmission will be fixed in 3rd as a fail-safe measure, and the N range indicator will flash at a rate of 1 Hz.	● Malfunction of A/T control relay ● Malfunction of harness or connector ● Malfunction of engine-A/T-ECU <6G7> ● Malfunction of A/T-ECU <4M4>

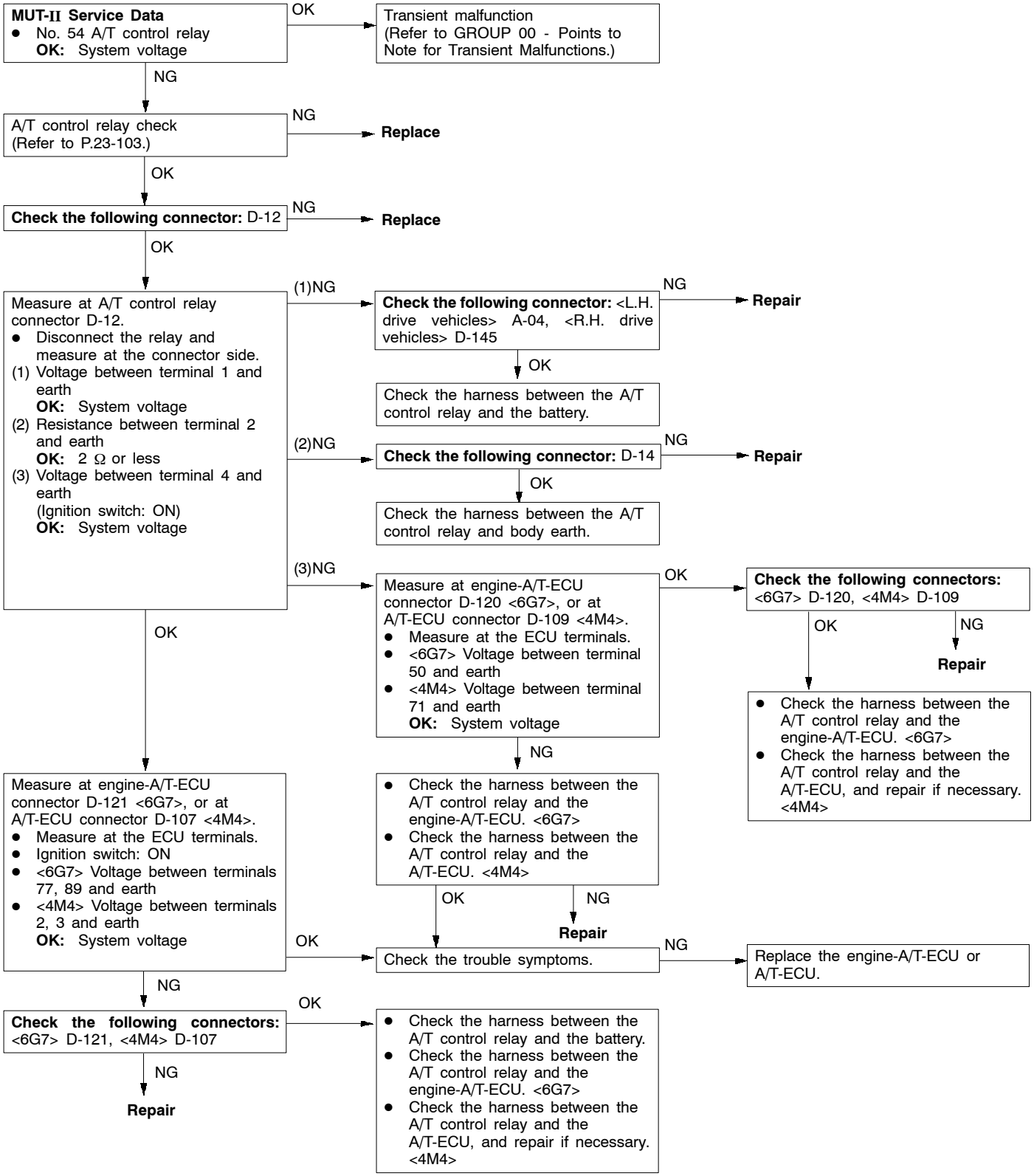

Code No. 56 N range lamp system	Probable cause
If the N range signal is OFF after the N range lamp illuminates (ON), it is judged that there is a short-circuit to earth in the N range lamp, and code No. 56 is output.	● Malfunction of Combination meter ● Malfunction of harness or connector ● Malfunction of engine-A/T-ECU <6G7> ● Malfunction of A/T-ECU <4M4>

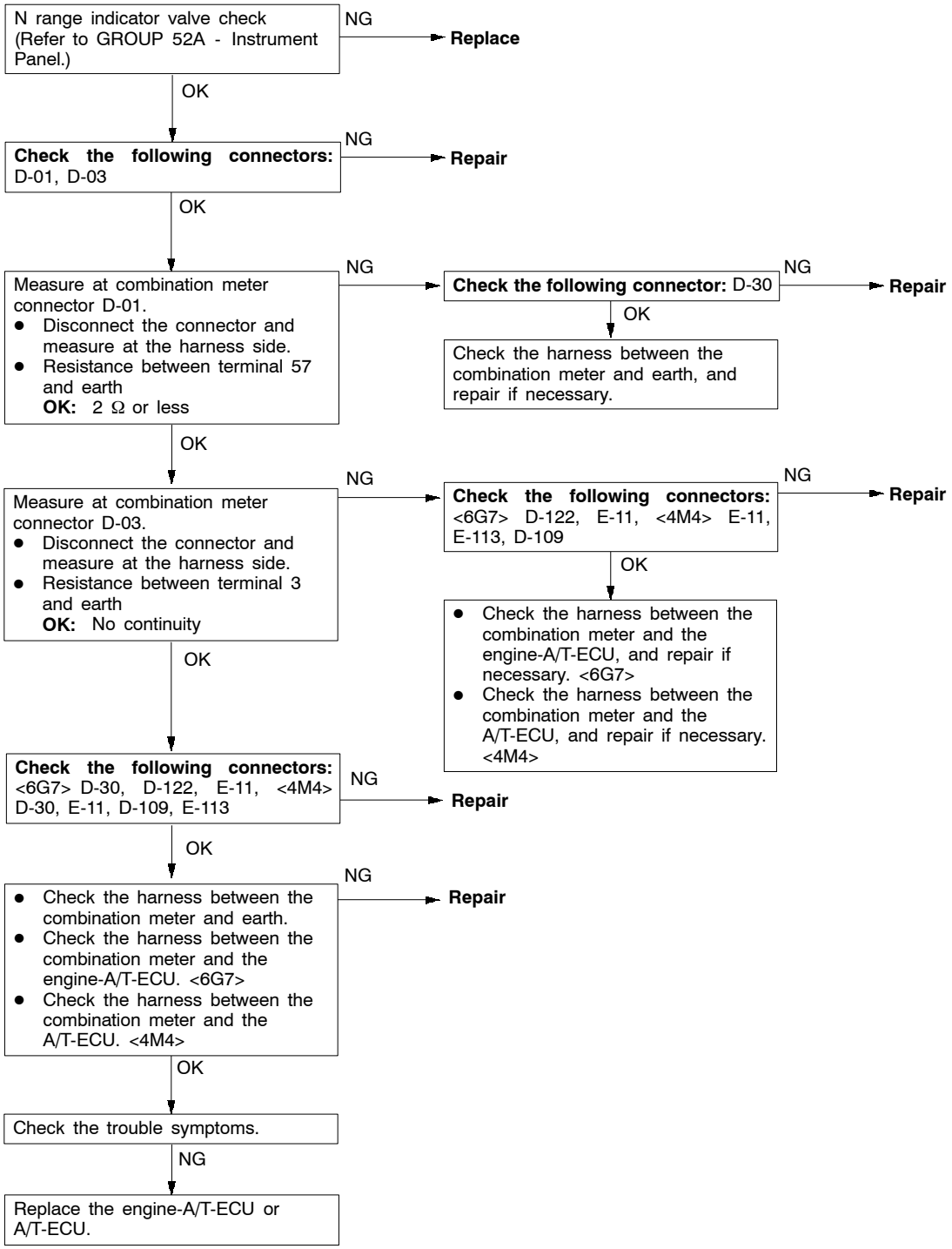

CHART CLASSIFIED BY TROUBLE SYMPTOMS

Trouble Symptom		Inspection procedure No.	Reference page
Communication with the MUT-II is not possible.		1	23-48
Driving not possible	Starting not possible	2	23-49
	Does not move forward	3	23-49
	Does not reverse	4	23-50
	Does not move (forward or reverse)	5	23-51
Malfunction when starting off	Engine stalls during shifting	6	23-51
	N-to-D shocks, large time lag	7	23-52
	N-to-R shocks, large time lag	8	23-53
	N-to-D, N-to-R shocks, large time lag	9	23-54
Problem during shifting	Shocks, engine racing	10	23-54
Incorrect shift points	All points	11	23-55
	Some points	12	23-56
No shifting	No diagnosis code	13	23-56
Problem during driving	Poor acceleration	14	23-57
	Vibration	15	23-57
Inhibitor switch system		16	23-58
Shift switch assembly system		17	23-58
Dual pressure switch system		18	23-59
Vehicle speed sensor system		19	23-59
4LLc switch system		20	23-60

INSPECTION PROCEDURES CLASSIFIED BY TROUBLE SYMPTOM

Inspection procedure 1

Communication with the MUT-II is not possible.	Probable cause
If communication with the MUT-II is not possible, the cause is probably a malfunction of the diagnosis line or the A/T-ECU is not functioning.	• Malfunction of diagnosis line • Malfunction of harness or connector • Malfunction of engine-A/T-ECU <6G7> • Malfunction of A/T-ECU <4M4>

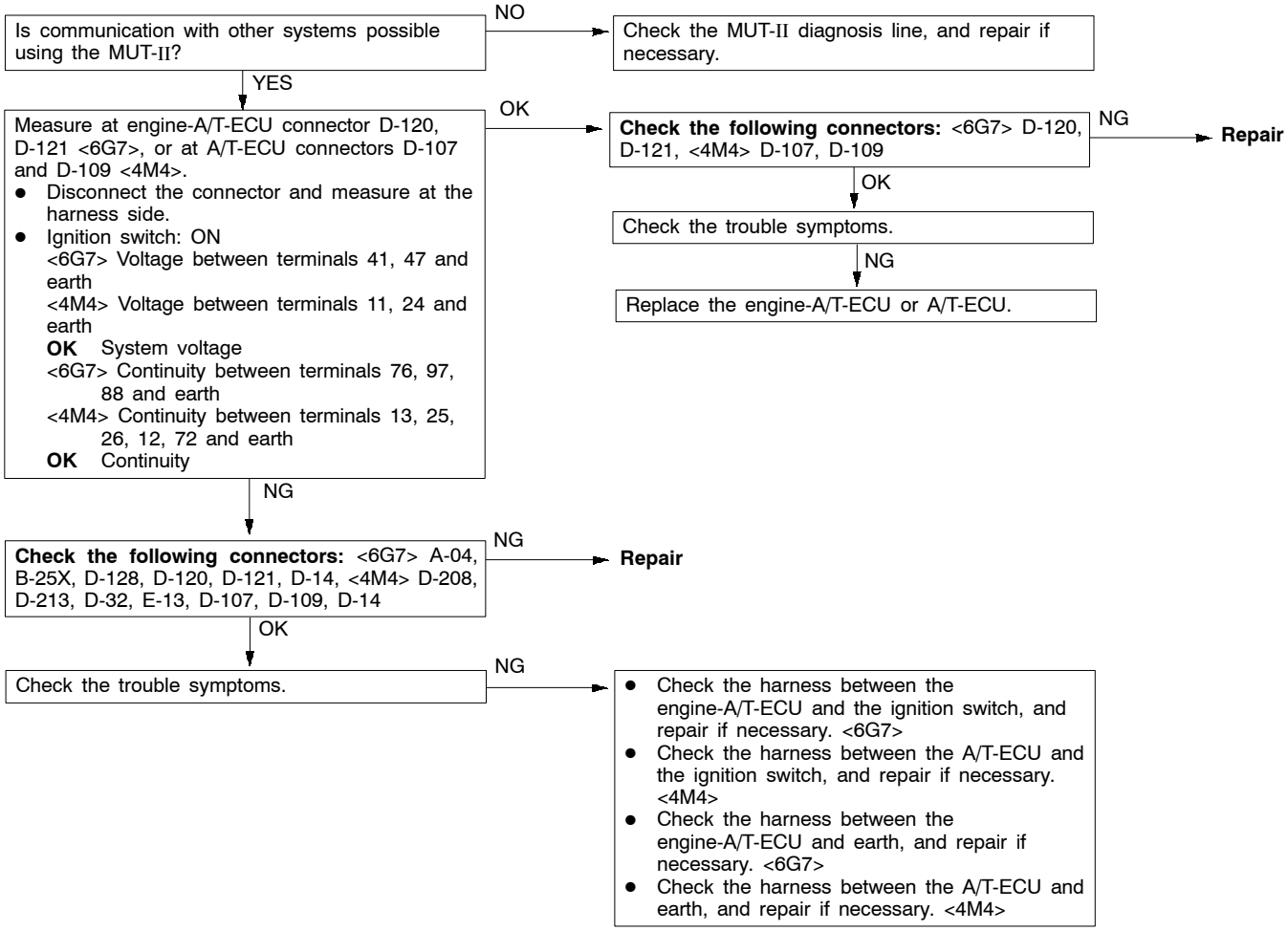

Inspection procedure 2

Starting not possible	Probable cause
If the engine will not start when the selector lever is at the P or N position, the cause is probably a malfunction of the inhibitor switch system, the transmission control cable assembly, the engine system, the torque converter or the oil pump.	● Malfunction of inhibitor switch system ● Malfunction of transmission control cable assembly ● Malfunction of engine system ● Malfunction of torque converter ● Malfunction of oil pump ● Malfunction of engine-A/T-ECU <6G7> ● Malfunction of A/T-ECU <4M4>

★ Refer to the Transmission Workshop Manual.

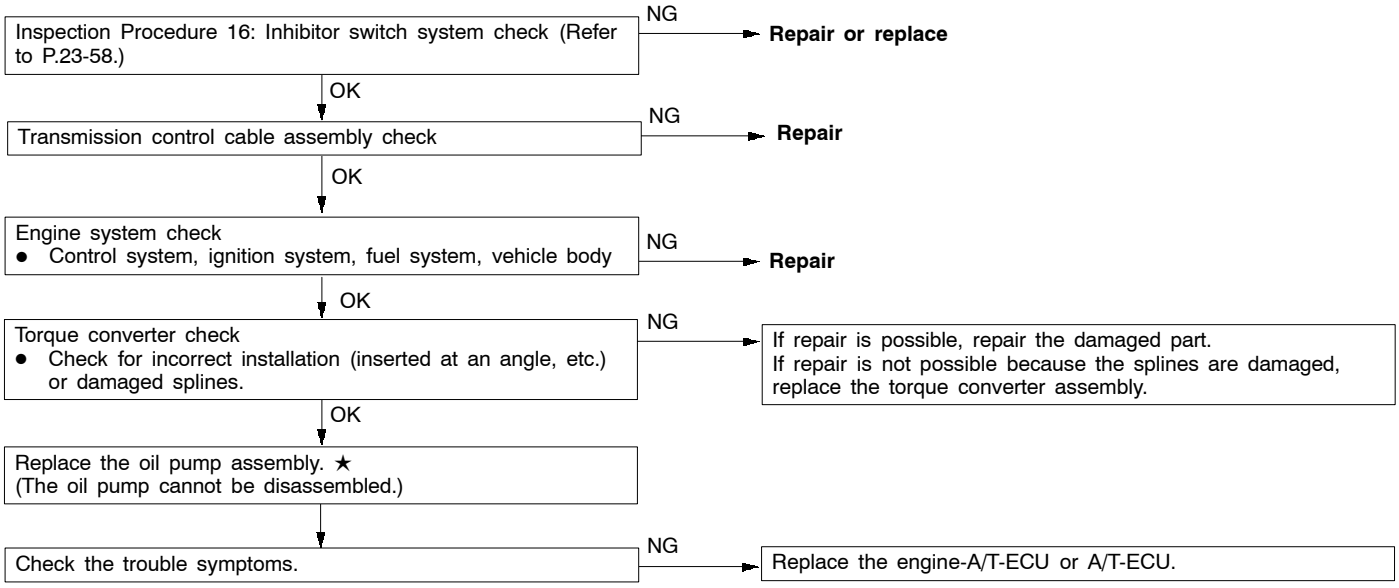

Inspection procedure 3

Does not move forward	Probable cause
If the vehicle does not move forward when the engine is idling and the selector lever is moved from N to D, 3, 2 or L, or if it is shifted to 1st or 2nd in Sports mode, the cause is probably a problem with line pressure, or a malfunction of the UD clutch or valve body.	● Abnormal line pressure ● Malfunction of UD solenoid valve ● Malfunction of UD clutch system ● Malfunction of valve body ● Malfunction of engine-A/T-ECU <6G7> ● Malfunction of A/T-ECU <4M4>

★ Refer to the Transmission Workshop Manual.

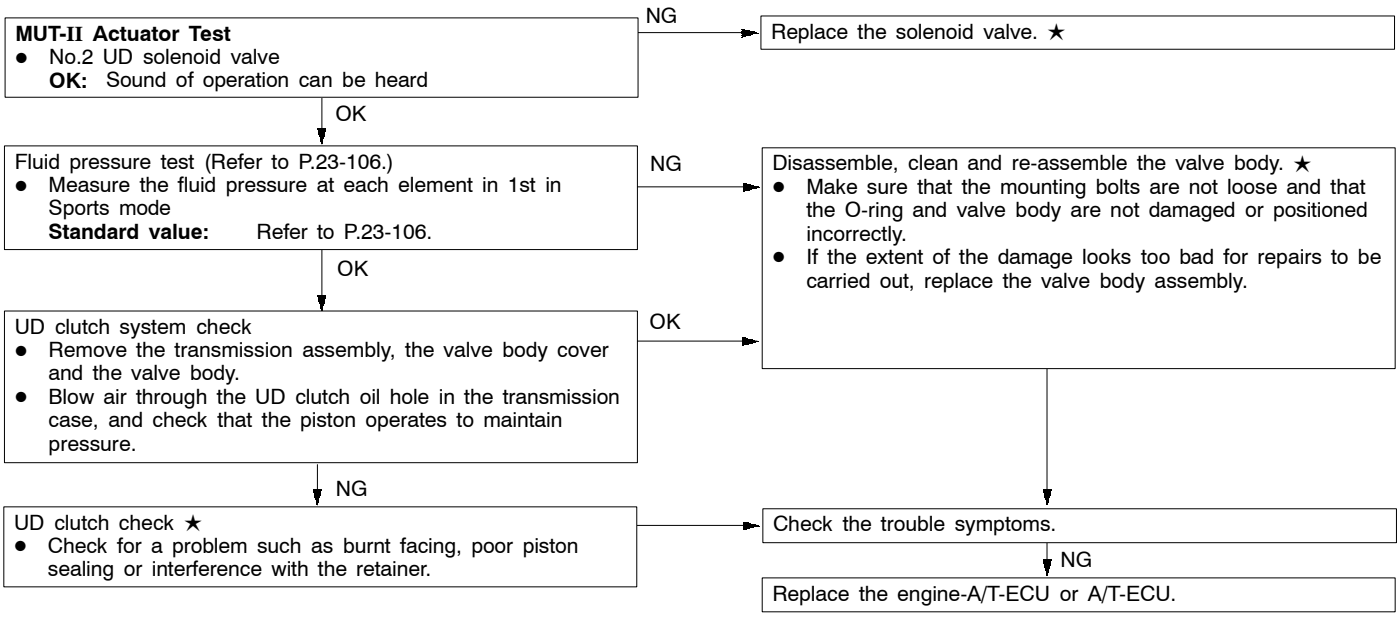

Inspection procedure 4

Does not reverse	Probable cause
If the vehicle does not reverse when the engine is idling and the selector lever is moved from N to R, the cause is probably a problem with reverse clutch pressure or LR brake pressure, or a malfunction of the reverse clutch, LD clutch or valve body.	● Abnormal reverse clutch pressure ● Abnormal LR brake pressure ● Malfunction of LR solenoid valve ● Malfunction of reverse clutch ● Malfunction of LR brake ● Malfunction of valve body ● Replacement of engine-A/T-ECU <6G7> ● Replacement of A/T-ECU. <4M4>

★ Refer to the Transmission Workshop Manual.

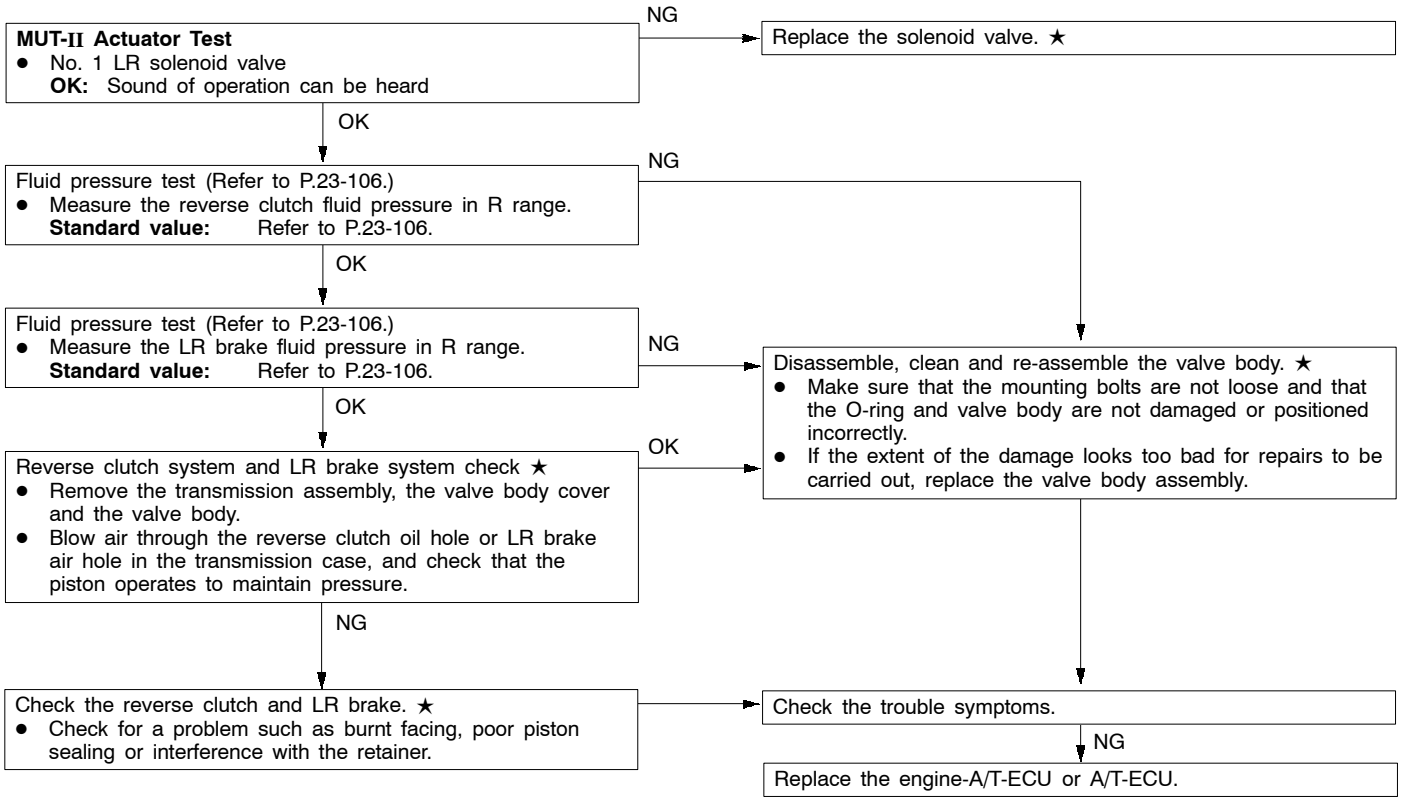

Inspection procedure 5

Does not move (forward or reverse)	Probable cause
If the vehicle does not move forward or reverse when the selector lever is moved to any position while the engine is idling, the cause is probably a problem with line pressure or a malfunction of the oil pumps and valve bodies in the power train.	● Abnormal line pressure ● Malfunction of power train components ● Malfunction of oil pump ● Malfunction of valve body ● Malfunction of engine-A/T-ECU <6G7> ● Malfunction of A/T-ECU <4M4>

★ Refer to the Transmission Workshop Manual.

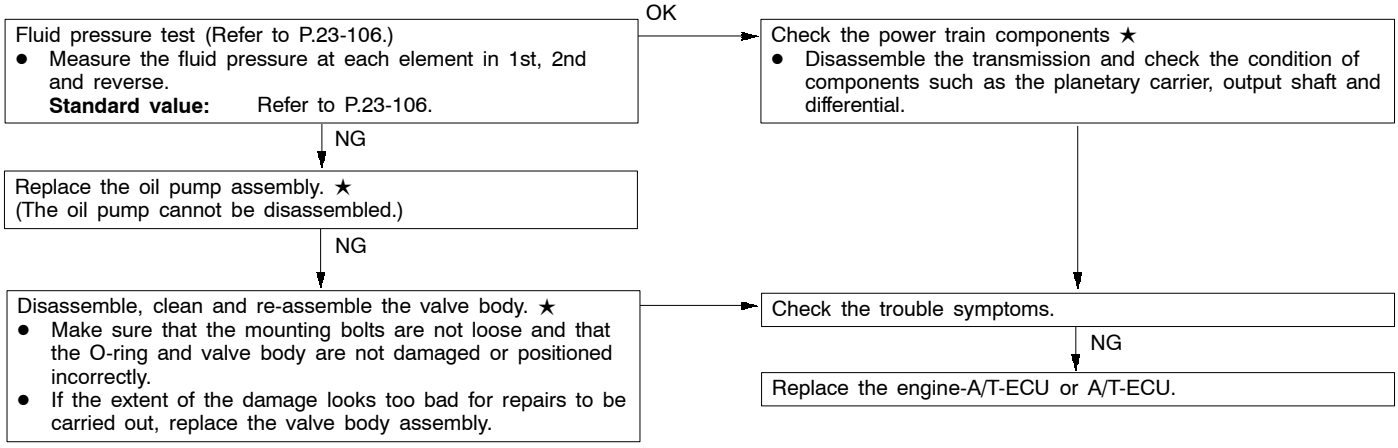

Inspection procedure 6

Engine stalls during shifting	Probable cause
If the engine stalls when the selector lever is moved from N to D or R while the engine is idling, the cause is probably a malfunction of the engine system, DCC solenoid valve, valve body, or torque converter (damper clutch).	● Malfunction of engine system ● Malfunction of DCC solenoid valve ● Malfunction of valve body ● Malfunction of torque converter (malfunction of damper clutch) ● Malfunction of engine-A/T-ECU <6G7> ● Malfunction of A/T-ECU <4M4>

★ Refer to the Transmission Workshop Manual.

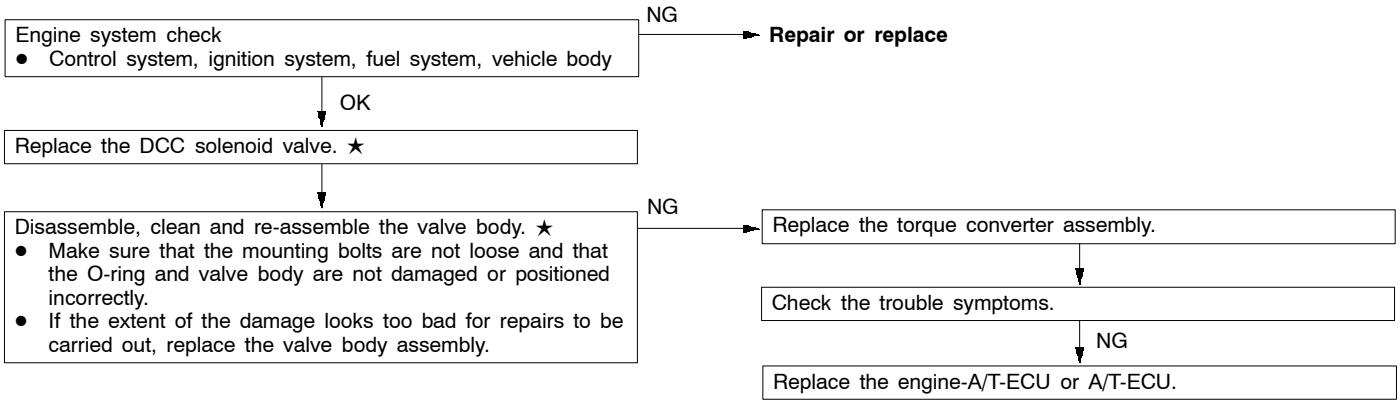

Inspection procedure 7

N-to-D shocks, large time lag	Probable cause
If abnormal shocks or a time lag of 2 seconds or more occurs when the selector lever is moved from N to D while the engine is idling, the cause is probably abnormal UD clutch pressure, or a malfunction of the UD clutch, valve body or APS.	● Abnormal UD clutch pressure ● Malfunction of UD solenoid valve ● Malfunction of UD clutch system ● Malfunction of valve body ● Malfunction of APS ● Malfunction of engine-A/T-ECU <6G7> ● Malfunction of A/T-ECU <4M4>

★ Refer to the Transmission Workshop Manual.

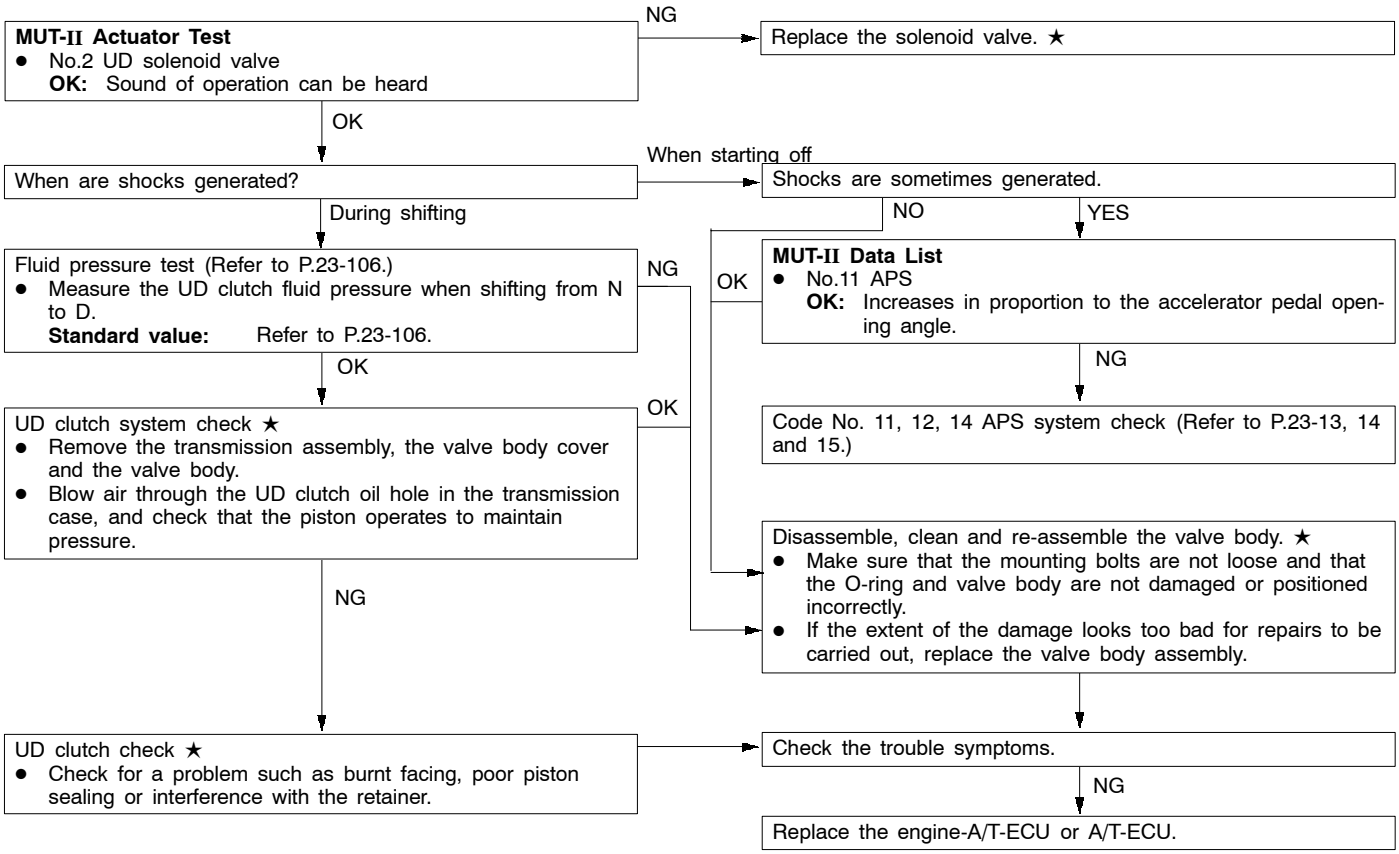

Inspection procedure 8

N to R shocks, large time lag	Probable cause
If abnormal shocks or a time lag of 2 seconds or more occurs when the selector lever is moved from N to R while the engine is idling, the cause is probably abnormal reverse clutch pressure or LD brake pressure, or a malfunction of the reverse clutch, LR brake, valve body or APS.	• Abnormal reverse clutch pressure • Abnormal LR brake pressure • Malfunction of LR solenoid valve • Malfunction of reverse clutch • Malfunction of LR brake • Malfunction of valve body • Malfunction of APS • Malfunction of engine-A/T-ECU <6G7> • Malfunction of A/T-ECU <4M4>

★ Refer to the Transmission Workshop Manual.

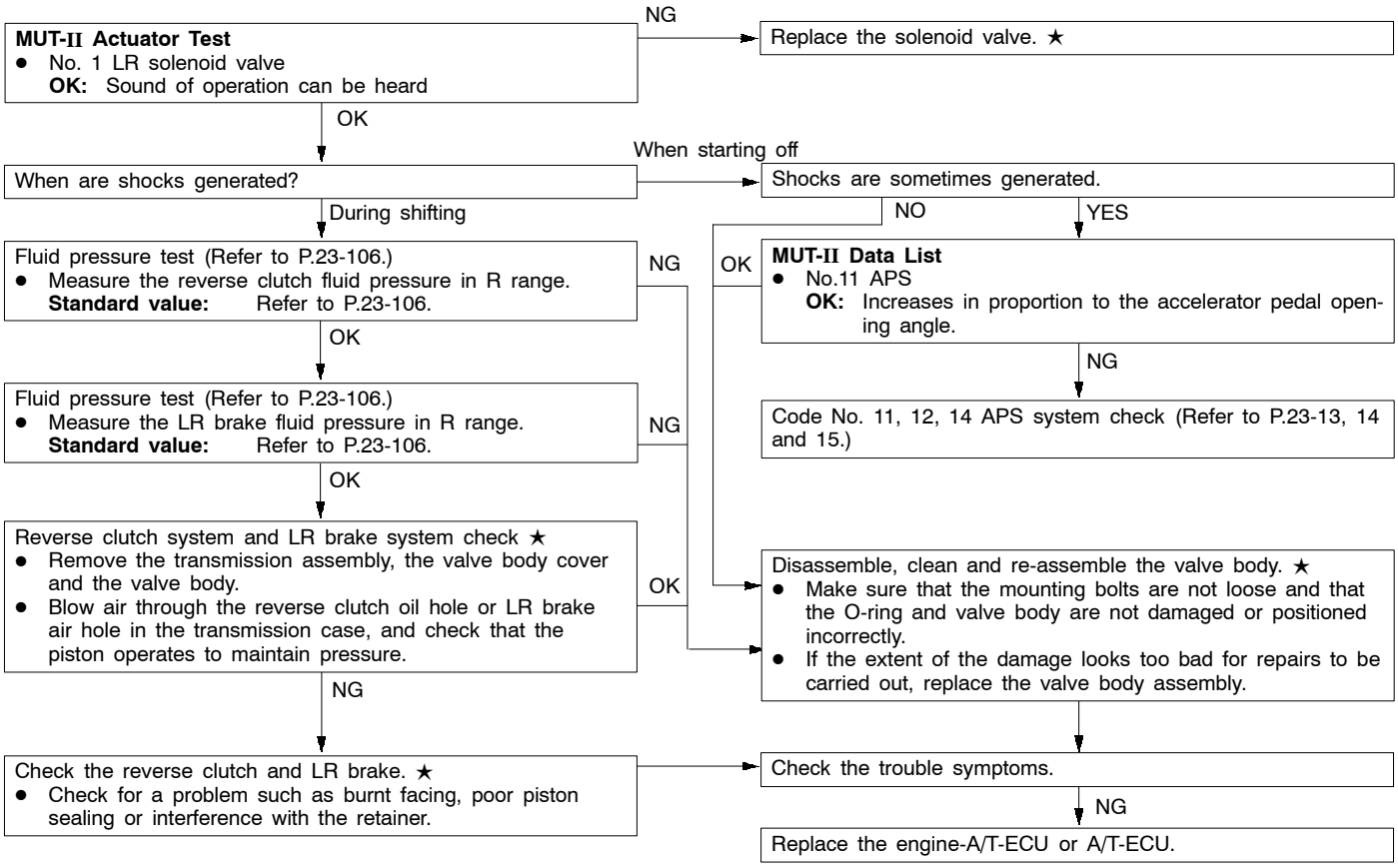

Inspection procedure 9

N-to-D and N-to-R shocks, large time lag	Probable cause
If abnormal shocks or a time lag of 2 seconds or more occurs when the selector lever is moved from N to both D and R while the engine is idling, the cause is probably abnormal line pressure, or a malfunction of the oil pump or valve body.	● Abnormal line pressure ● Malfunction of oil pump ● Malfunction of valve body ● Malfunction of engine-A/T-ECU <6G7> ● Malfunction of A/T-ECU <4M4>

★ Refer to the Transmission Workshop Manual.

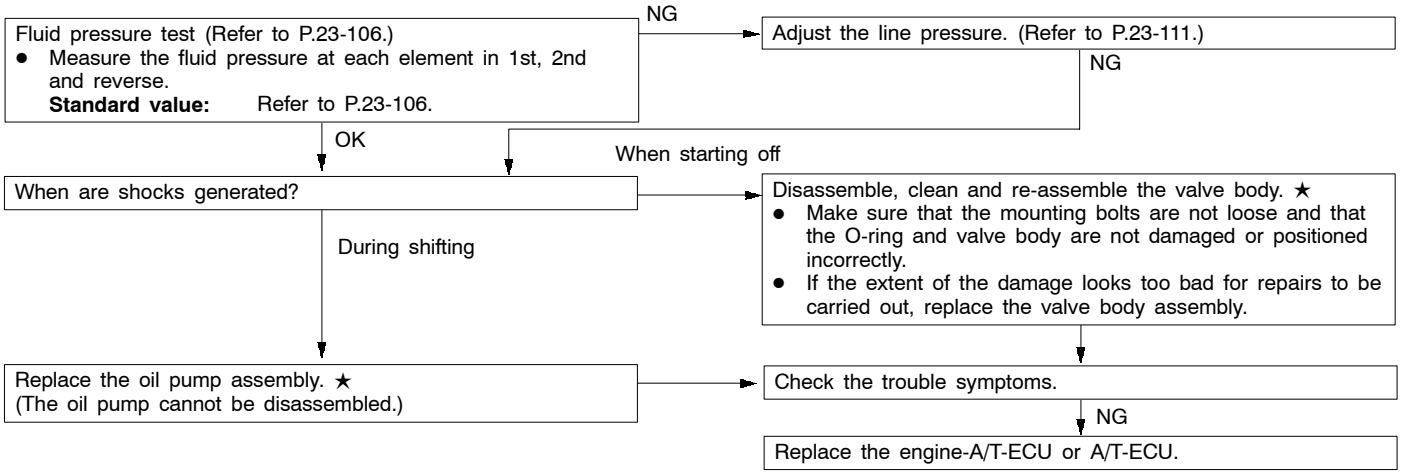

Inspection procedure 10

Shocks, engine racing	Probable cause
If shocks occur when driving due to upshifting or downshifting, or the transmission speed becomes higher than the engine speed, the cause is probably abnormal line pressure or a malfunction of a solenoid valve, oil pump, valve body or of a brake or clutch.	● Abnormal line pressure ● Malfunction of solenoid valve ● Malfunction of oil pump ● Malfunction of valve body ● Malfunction of brake or clutch ● Malfunction of engine-A/T-ECU <6G7> ● Malfunction of A/T-ECU <4M4>

★ Refer to the Transmission Workshop Manual.

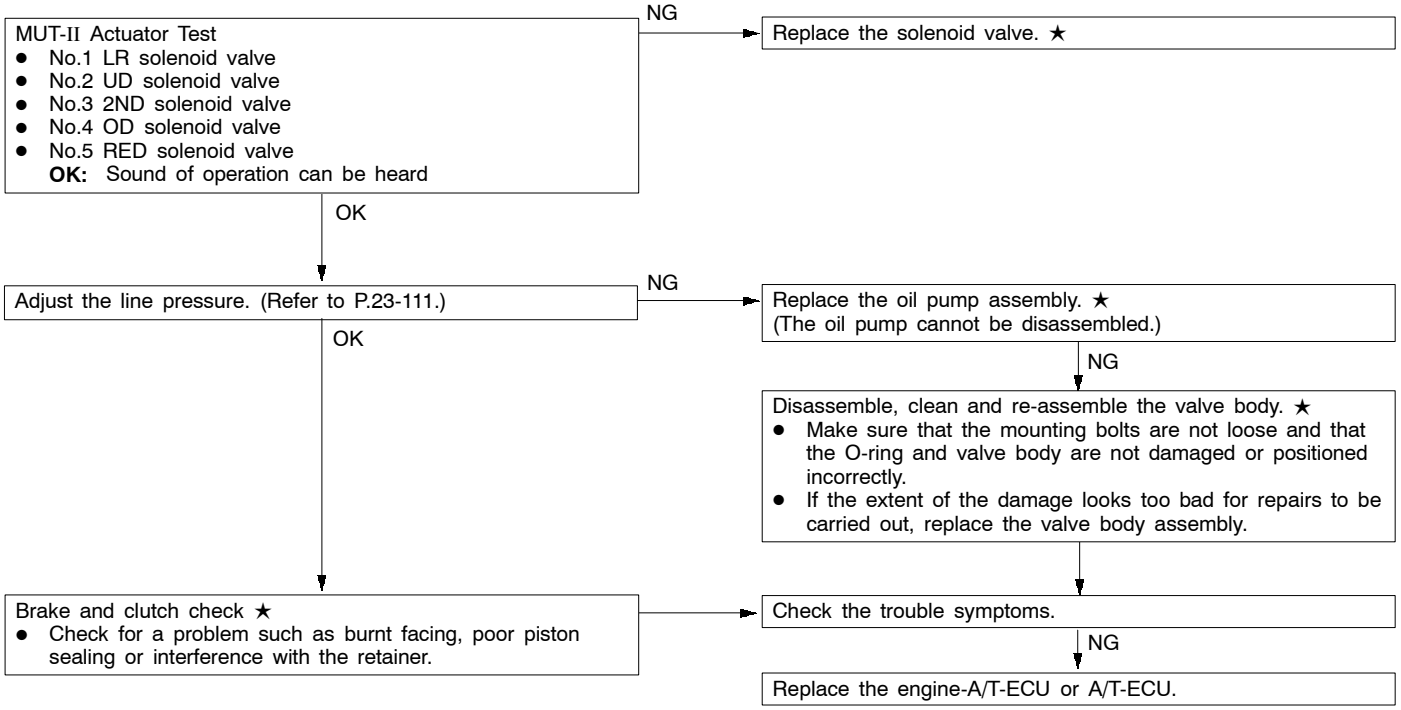

Inspection procedure 11

All points (incorrect shift points)	Probable cause
If all shift points are incorrect during driving, the cause is probably a malfunction of the output speed sensor, APS or solenoid valve.	• Malfunction of output shaft speed sensor • Malfunction of APS • Malfunction of solenoid valve • Abnormal line pressure • Malfunction of valve body • Malfunction of engine-A/T-ECU <6G7> • Malfunction of A/T-ECU <4M4>

★ Refer to the Transmission Workshop Manual.

MUT-II Data List
- No. 23 Output shaft speed sensor system
  OK: Increases in proportion to vehicle speed.

NG → Code No. 23 Output shaft speed sensor system (Refer to P.23-22.)

OK ↓

MUT-II Data List
- No.11 APS
  OK: Increases in proportion to the accelerator pedal opening angle.

NG → Code No. 11, 12, 14 APS system check (Refer to P.23-13, 14 and 15.)

OK ↓

MUT-II Data List
- No. 31 RED solenoid valve duty ratio
- No. 32 UD solenoid valve duty ratio
- No. 33 2ND solenoid valve duty ratio
- No. 34 OD solenoid valve duty ratio
- No. 35 RED solenoid valve duty ratio

OK:

	No.31	No.32	No.33	No.34	No.35
Driving at aconstant speed in 1st	0%	0%	100%	100%	0%
Driving at a constant speed in 2nd	100%	0%	0%	100%	0%
Driving at a constant speed in 3rd	100%	0%	100%	0%	0%
Driving at a constant speed in 4th	0%	0%	100%	0%	100%
Driving at a constant speed in 5th	0%	100%	0%	0%	100%

NG → Replace the solenoid valve. ★

OK ↓

Adjust the line pressure. (Refer to P.23-111.)

NG ↓

Disassemble, clean and re-assemble the valve body. ★
- Make sure that the mounting bolts are not loose and that the O-ring and valve body are not damaged or positioned incorrectly.
- If the extent of the damage looks too bad for repairs to be carried out, replace the valve body assembly.

→ Check the trouble symptoms.

NG ↓

Replace the engine-A/T-ECU or A/T-ECU.

Inspection procedure 12

Some points (incorrect shift points)	Probable cause
If some of the shift points are incorrect while driving, the cause is probably a malfunction of the valve body, or it is a characteristic of control and is not a malfunction.	● Malfunction of valve body ● Malfunction of engine-A/T-ECU <6G7> ● Malfunction of A/T-ECU <4M4>

★ Refer to the Transmission Workshop Manual.

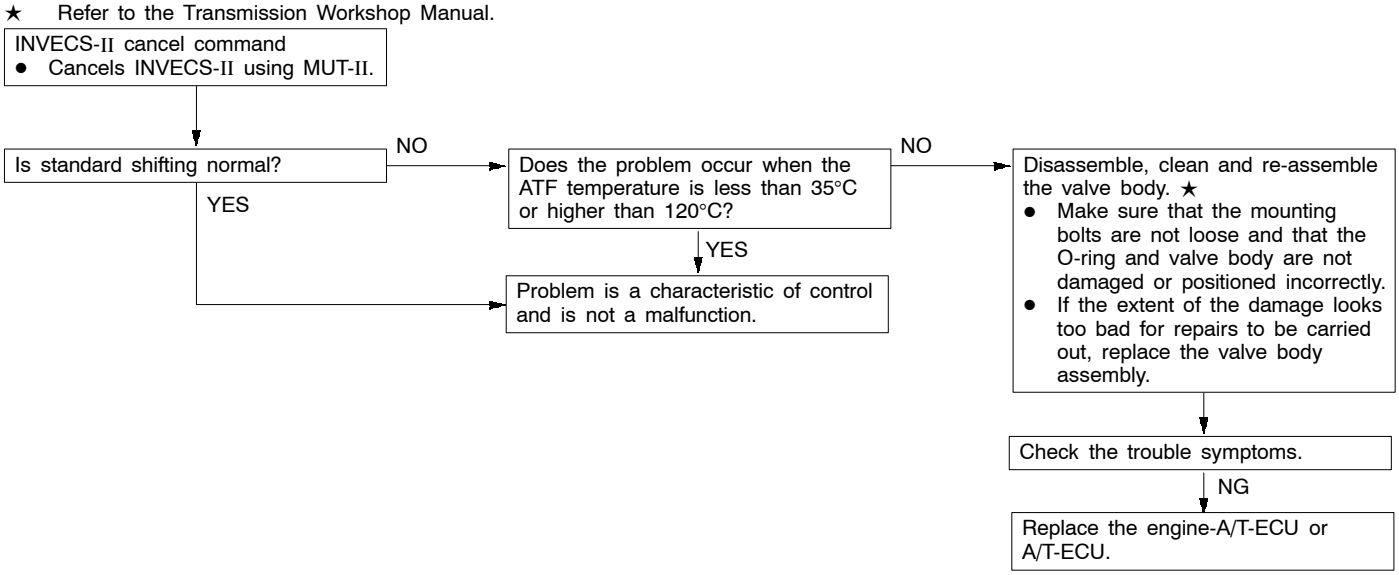

Inspection procedure 13

No diagnosis code (no shifting)	Probable cause
No shifting during driving However, if a diagnosis code is not output, the cause is probably malfunction of the inhibitor switch system, the shift switch assembly, the engine A/T-ECU or the A/T-ECU.	● Malfunction of Inhibitor switch ● Malfunction of shift switch assembly system ● Malfunction of engine-A/T-ECU <6G7> ● Malfunction of A/T-ECU <4M4>

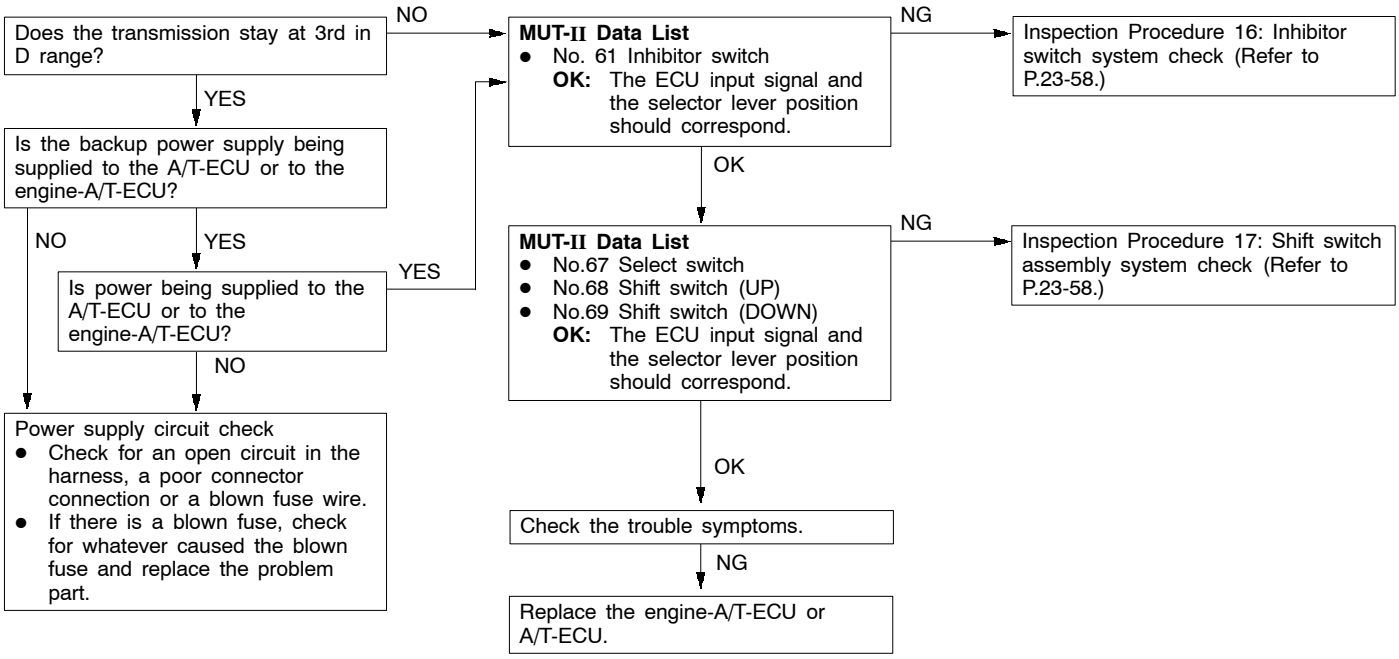

Inspection procedure 14

Poor acceleration	Probable cause
If the vehicle does not accelerate after downshifting, the cause is probably a malfunction of the engine system or of a brake or clutch.	● Malfunction of engine system ● Malfunction of brake or clutch ● Malfunction of engine-A/T-ECU <6G7> ● Malfunction of A/T-ECU <4M4>

★ Refer to the Transmission Workshop Manual.

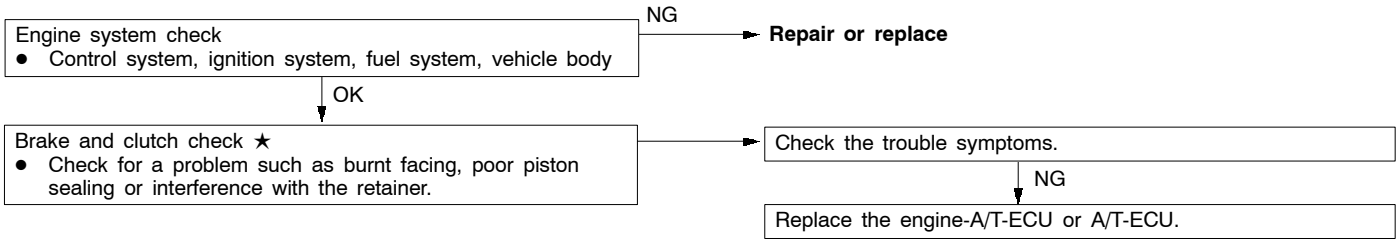

Inspection procedure 15

Vibration	Probable cause
If vibration occurs when accelerating or decelerating while driving at a constant speed or driving in top range, the cause is probably abnormal damper clutch pressure, or a malfunction of the engine system, DCC solenoid valve, torque converter or valve body.	● Abnormal damper clutch pressure ● Malfunction of engine system ● Malfunction of DCC solenoid valve ● Malfunction of torque converter ● Malfunction of valve body ● Malfunction of engine-A/T-ECU <6G7> ● Malfunction of A/T-ECU <4M4>

★ Refer to the Transmission Workshop Manual.

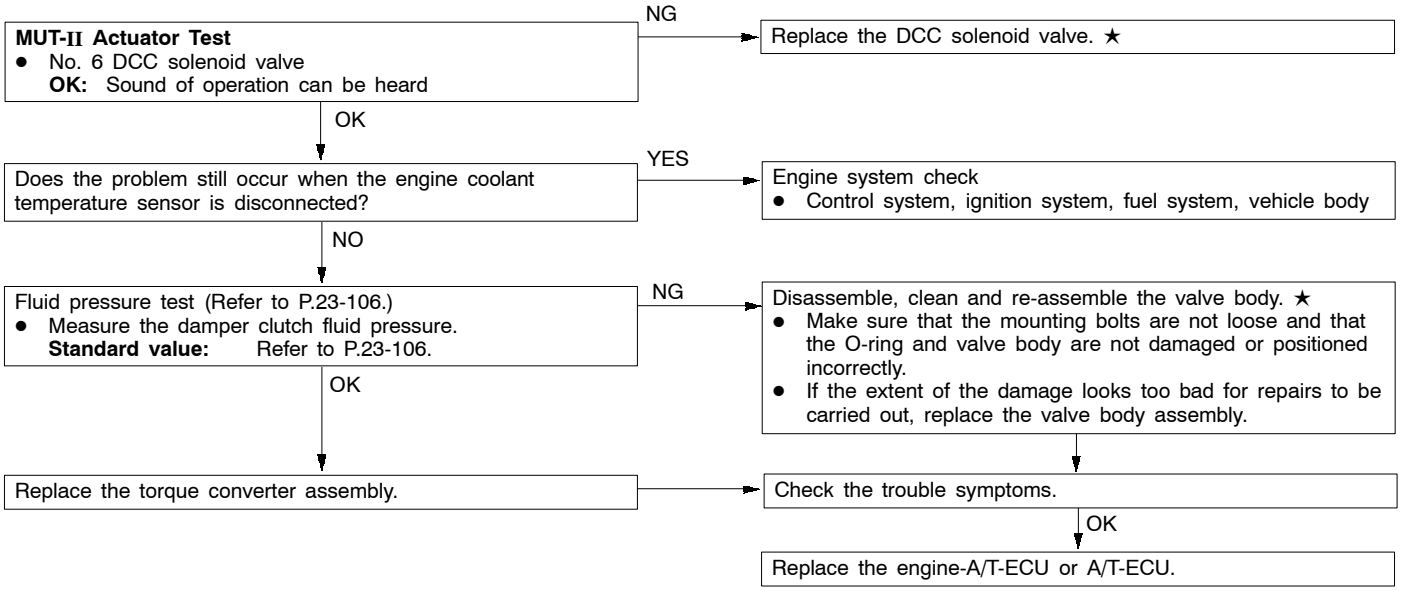

Inspection procedure 16

Inhibitor switch system	Probable cause
The cause is probably a malfunction of the inhibitor switch circuit or the ignition switch circuit.	• Malfunction of Inhibitor switch • Malfunction of ignition switch • Malfunction of harness or connector • Malfunction of engine-A/T-ECU <6G7> • Malfunction of A/T-ECU <4M4>

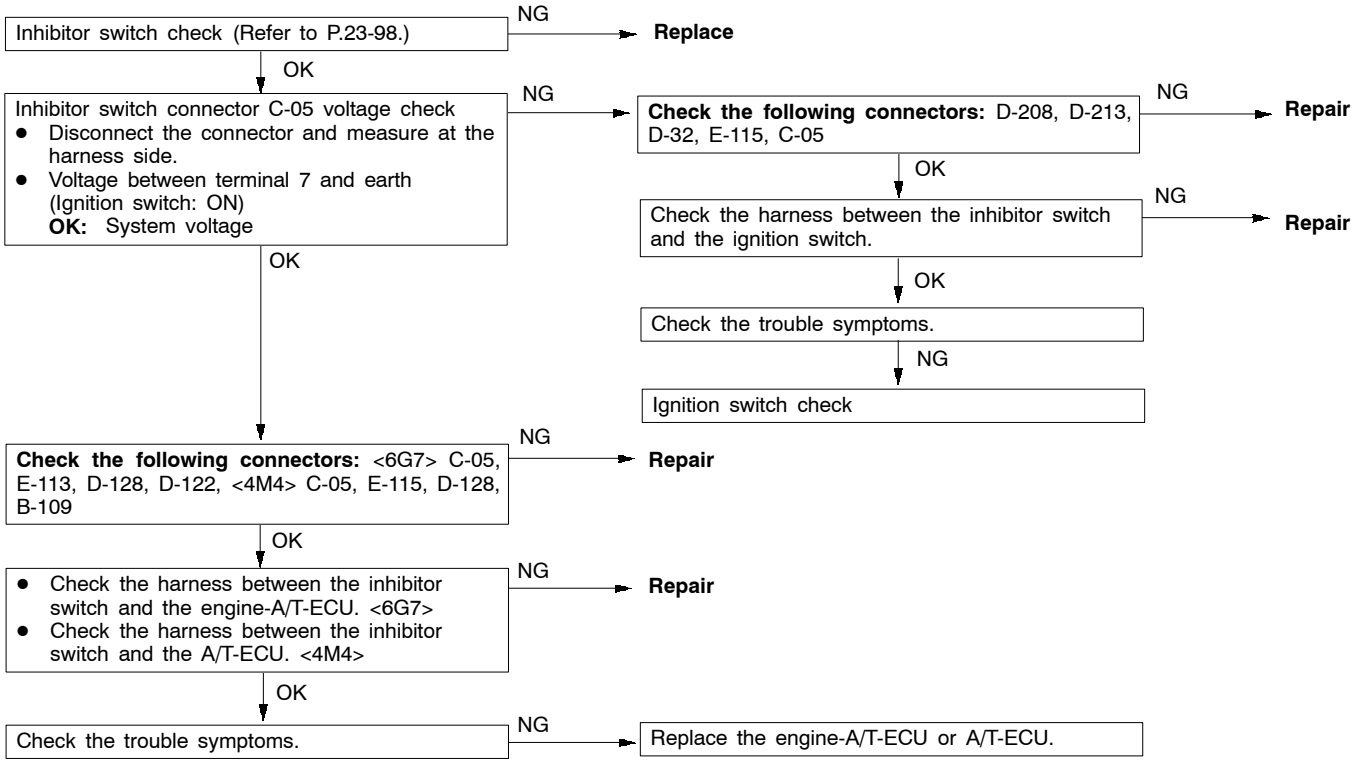

Inspection procedure 17

Shift switch assembly system	Probable cause
The cause is probably a malfunction of the inhibitor switch circuit, shift switch assembly circuit, or of the engine-A/T-ECU or A/T-ECU.	• Malfunction of inhibitor switch • Malfunction of select switch • Malfunction of shift switch (UP) • Malfunction of shift switch (DOWN) • Malfunction of harness or connector • Malfunction of engine-A/T-ECU <6G7> • Malfunction of A/T-ECU <4M4>

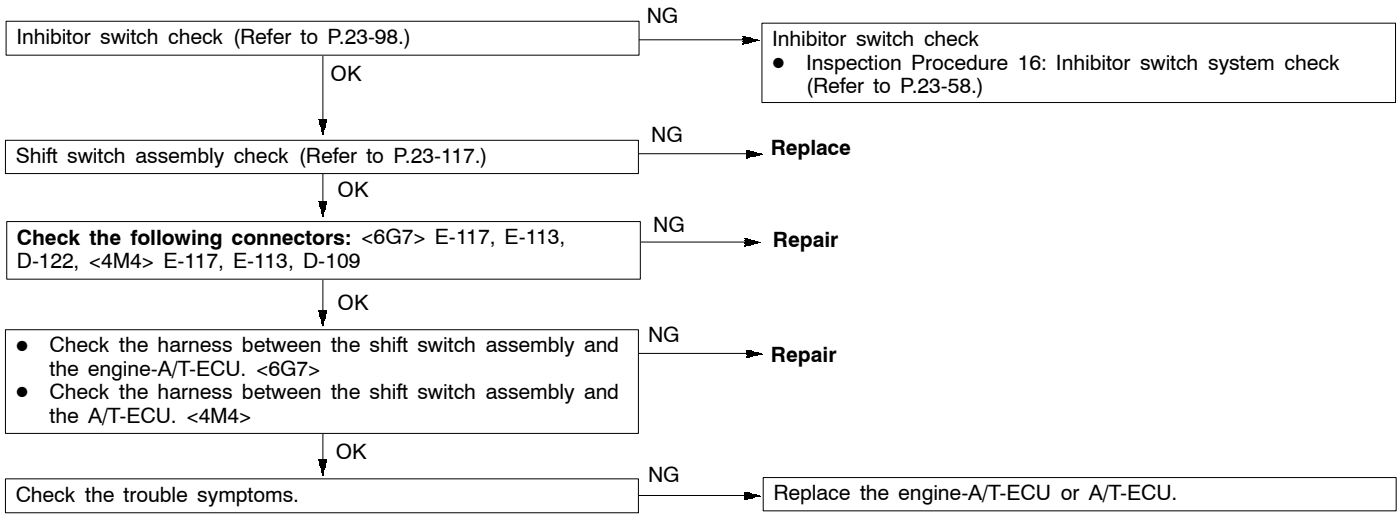

Inspection procedure 18

Dual pressure switch system	Probable cause
The cause is probably a malfunction of the dual pressure switch circuit, or of the engine-A/T-ECU or A/T-ECU.	• Malfunction of dual pressure switch • Malfunction of harness or connector • Malfunction of A/C system • Malfunction of engine-A/T-ECU <6G7> • Malfunction of A/T-ECU <4M4>

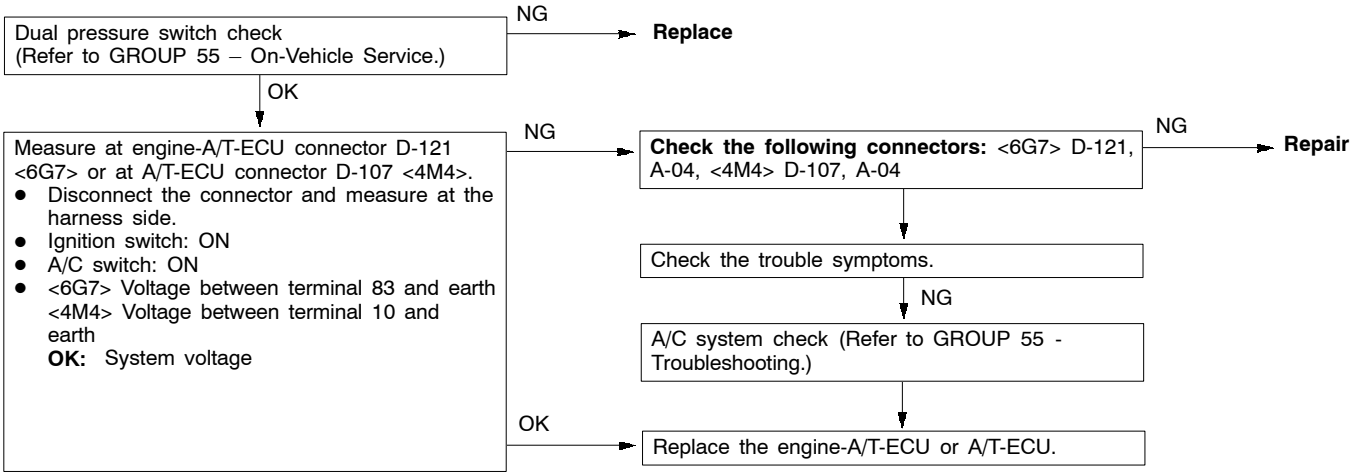

Inspection procedure 19

Vehicle speed sensor system	Probable cause
The cause is probably a malfunction of the vehicle speed sensor circuit, or of the A/T-ECU or the engine-A/T-ECU.	• Malfunction of vehicle speed sensor • Malfunction of connector • Malfunction of engine-A/T-ECU <6G7> • Malfunction of A/T-ECU <4M4>

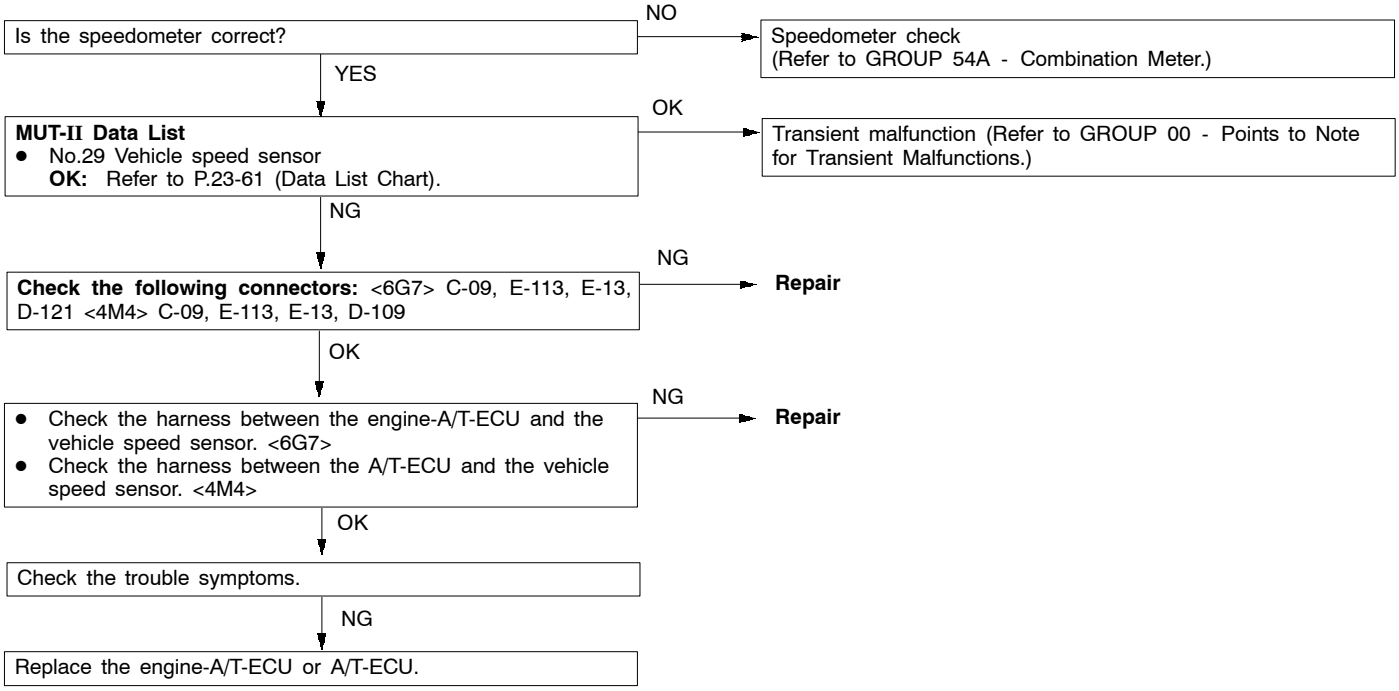

Inspection procedure 20

4LLc switch system	Probable cause
The cause is probably a malfunction of the 4LLc switch circuit, or of the engine-A/T-ECU or A/T-ECU.	● Malfunction of 4LLc switch ● Malfunction of harness or connector ● Malfunction of engine-A/T-ECU <6G7> ● Malfunction of A/T-ECU <4M4>

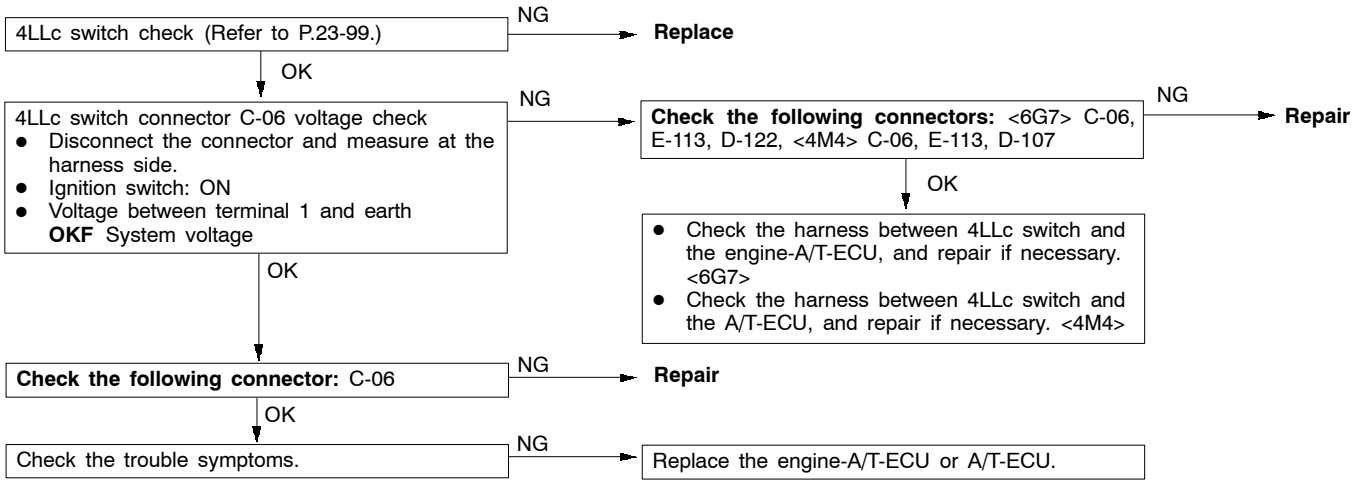

DATA LIST REFERENCE TABLE

Data list No.	Check item	Inspection conditions		Normal condition
11	APS	Ignition switch: ON Engine: Stopped Selector lever position: P	Accelerator pedal: Fully closed	985 - 1085 mV
			Accelerator pedal: Depressed	Gradually increases from the above value.
			Accelerator pedal: Fully open	4000 mV or higher
15	A/T fluid temperature sensor	Driving after engine has warmed up	Drive for 15 minutes or more until the ATF temperature reaches 70 - 80°C.	Gradually increases to 70 - 80°C.
21	Crank angle sensor <6G7> Engine speed sensor <4M4>	Engine: Idling Selector lever position: P	Compare the engine speeds displayed on the tachometer and the MUT-II.	Identical
22	Input shaft speed sensor	Shift range: 4th	Driving at a constant speed of 50 km/h in 4th	1300 - 1600 r/min
23	Output shaft speed sensor	Shift range: 4th	Driving at a constant speed of 50 km/h in 4th	1300 - 1600 r/min
25	Wide open throttle switch	Accelerator pedal position	Released	OFF
			Depressed	ON
26	Stop lamp switch	Ignition switch: ON Engine: Stopped	Brake pedal: Depressed	ON
			Brake pedal: Released	OFF
29	Vehicle speed sensor	Selector lever position: Sports mode	Idling in 1st (Vehicle stopped)	0 km/h
			Driving at a constant speed of 50 km/h in 3rd	50 km/h

31	LR solenoid valve duty ratio	Selector lever position: Sports mode	Data List No.	No. 31	No. 32	No. 33	No. 34	No.35
32	UD solenoid valve duty ratio		Driving at a constant speed in 1st	0%	0%	100%	100%	0%
33	2nd solenoid valve duty ratio		Driving at a constant speed in 2nd	100%	0%	0%	100%	0%
34	OD solenoid valve duty ratio		Driving at a constant speed in 3rd	100%	0%	100%	0%	0%
35	RED solenoid valve duty ratio		Driving at a constant speed in 4th	0%	0%	100%	0%	100%
			Driving at a constant speed in 5th	100%	100%	0%	0%	100%

Data list No.	Check item	Inspection conditions		Normal condition
36	DCC solenoid valve duty ratio	Shift range: 2nd	Driving at 30 km/h in 2 range, then fully close accelerator.	70% - 90% -to- 0%
			Driving at 50 km/h in 4th	70% - 90%
52	Damper clutch slip amount	Shift range: 2nd	Driving at 30 km/h in 2 range, then fully close accelerator.	-300 - 100 r/min or 100 - 300 r/min
			Driving at a constant speed of 50 km/h in 4th	-10 - 10 r/min
54	Control relay output voltage	Ignition switch: OFF	Ignition switch: ON	10 - 12 V
61	Inhibitor switch	Ignition switch: ON Engine: Stopped	Selector lever position: P	P
			Selector lever position: R	R
			Selector lever position: N	N
			Selector lever position: D	D
63	Shift position	Selector lever position: Sports mode	Driving at a constant speed of 10 km/h in 1st	1st
			Driving at a constant speed of 30 km/h in 2nd	2nd
			Driving at a constant speed of 50 km/h in 3rd	3rd
			Driving at a constant speed of 50 km/h in 4th	4th
			Driving at a constant speed of 70 km/h in 5th	5th
65	Dual pressure switch	Engine: Idling	A/C switch: ON	ON
			A/C switch: OFF	OFF
66	OD-OFF signal <Vehicles with auto-cruise control system>	While auto-cruise control is operating	While driving on a level road	OFF
			While climbing an incline	ON

Data list No.	Check item	Inspection conditions		Normal condition		
67	Select switch	Ignition switch: ON Engine: Stopped	(Data List No.)	No. 67	No. 68	No. 69
			Selector lever position: D	OFF	OFF	OFF
68	Upshift switch		Selector lever operation: Sports mode selected	ON	OFF	OFF
69	Downshift switch		Selector lever operation: Lever moved to upshift position and held	ON	ON	OFF
			Selector lever operation: Lever moved to downshift position and held	ON	OFF	ON
73	Target effective engine pressure <6G7>	Engine: Idling Selector lever position: N	Accelerator pedal: fully closed to depressed	Data changes.		
75	4LLc switch	Ignition switch: ON Engine: Stopped	Transfer lever position: 4LLc	ON		
			Transfer lever position: Other than the above	OFF		
76	Theoretical effective engine pressure <4M4>	Engine: Idling Selector lever position: N	Accelerator pedal: fully closed to depressed	Data changes.		

ACTUATOR TEST TABLE

Item No.	Check item	Test contents	Inspection conditions	Normal condition
1	LR solenoid valve	The solenoid valve specified by the MUT-II is driven at 50% duty for 5 seconds. No other solenoid valves are energised.	Ignition switch: ON Selector lever position: P Engine: Stopped Throttle (accelerator) Opening angle voltage: Less than 1 V <6G7>, less than 1.2 V <4M4> The fail-safe function should not be operating.	The sound of operation should be heard when the solenoid valve is driven.
2	UD solenoid valve			
3	2nd solenoid valve			
4	OD solenoid valve			
5	RED solenoid valve			
6	DCC solenoid valve			
7	1st shift indicator lamp	The indicator lamp for the shift stage specified by the MUT-II illuminates for 3 seconds.		The shift indicator lamp illuminates.
8	2nd shift indicator lamp			
9	3rd shift indicator lamp			
10	4th shift indicator lamp			
11	5th shift indicator lamp			
12	A/T control relay	The A/T control relay turns off for 3 seconds.		Data List No. 54 (1) During test: 0 V (2) Normal: System voltage (V)

INVECS-II CANCEL COMMAND

Item No.	Item	Contents	NOTE
14	INVECS-II	Stops the INVECS-II control and changes gear according to the standard shift pattern.	Use this procedure when carrying out road test procedure 7. This function cancels the stopping of INVECS-II control when the ignition switch is turned OFF and then back ON.

A/T-ECU TERMINAL VOLTAGE TABLE

<6G7>

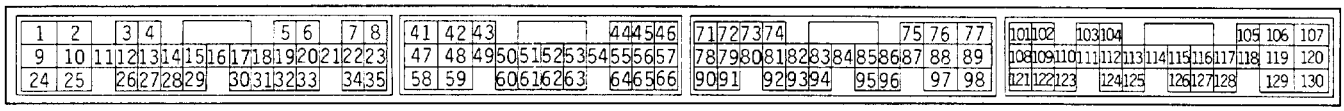

9FA0253

Terminal No.	Check item	Inspection conditions	Standard value
50	A/T control relay	Ignition switch: OFF	0 V
		Ignition switch: ON	10 - 12 V
76	Earth	At all times	0 V
77	Solenoid valve power supply	Ignition switch: OFF	0 V
		Ignition switch: ON	System voltage
81	Sensor earth	At all times	0 V
88	Earth	At all times	0 V
89	Solenoid valve power supply	Ignition switch: OFF	0 V
		Ignition switch: ON	System voltage
97	Earth	At all times	0 V
101	Inhibitor switch P	Ignition switch: ON Selector lever position: P	System voltage
		Ignition switch: ON Selector lever position: Other than the above	0 V
102	Inhibitor switch D	Ignition switch: ON Selector lever: D	System voltage
		Ignition switch: ON Selector lever position: Other than the above	0 V
103	Input shaft speed sensor	Measure between terminals (57) and (103) using an oscilloscope. Engine: 2 000 r/min Shift range: 4th	Check Procedure Using an Oscilloscope (Refer to P.23-69.)
104	Output shaft speed sensor	Measure between terminals (57) and (104) using an oscilloscope. Engine: 2 000 r/min Shift range: 4th	Check Procedure Using an Oscilloscope (Refer to P.23-69.)
105	1st shift indicator lamp	Shift range: 1st	System voltage
		Shift range: Other than the above	0 V

Terminal No.	Check item	Inspection conditions	Standard value
106	2nd solenoid valve	Engine: Idling Shift range: 2nd	System voltage
		Engine: Idling Shift range: Park	7–9 V
107	DCC solenoid valve	Engine: Idling Shift range: 1st	System voltage
108	Inhibitor switch R	Engine: Idling Selector lever position: R	System voltage
		Engine: Idling Shift range: Other than the above	0 V
109	Select switch	Ignition switch: ON Selector lever operation: Sports mode	System voltage
		Ignition switch: ON Selector lever operation: Other than the above	0 V
110	Downshift switch	Ignition switch: ON Selector lever operation: Downshifted in Sports mode and lever held	System voltage
		Ignition switch: ON Selector lever operation: Other than the above	0 V
112	4LLc switch	Ignition switch: ON Transfer lever position: 4LLc	System voltage
		Ignition switch: ON Transfer lever position: Other than the above	0 V
115	Wide open throttle switch	Accelerator pedal: Released	System voltage
		Accelerator pedal: Depressed	0 V
117	3rd shift indicator lamp	Shift range: 3rd	System voltage
		Shift range: Other than the above	0 V
118	2nd shift indicator lamp	Shift range: 2nd	System voltage
		Shift range: Other than the above	0 V
119	RED solenoid valve	Engine: Idling Shift range: 5th	System voltage
		Engine: Idling Shift range: Park	7 - 9 V
120	UD solenoid valve	Engine: Idling Shift range: 1st	System voltage
		Engine: Idling Shift range: Park	7 - 9 V
121	Inhibitor switch N	Ignition switch: ON Selector lever position: N	System voltage
		Ignition switch: ON Selector lever position: Other than the above	0 V
122	Upshift switch	Ignition switch: ON Selector lever operation: Upshifted in Sports mode and lever held	System voltage
		Ignition switch: ON Selector lever operation: Other than the above	0 V
123	Stop lamp switch	Ignition switch: ON Brake pedal Depressed	System voltage
		Ignition switch: ON Brake pedal Released	0 V

Terminal No.	Check item	Inspection conditions	Standard value
124	A/T fluid temperature sensor	ATF temperature: 20°C	3.8 - 4.0 V
		ATF temperature: 40°C	3.2 - 3.4 V
		ATF temperature: 80°C	1.7 - 1.9 V
127	5th shift indicator lamp	Shift range: 5th	System voltage
		Shift range: Other than the above	0 V
128	4th shift indicator lamp	Shift range: 4th	System voltage
		Shift range: Other than the above	0 V
129	LR solenoid valve	Engine: Idling Shift range: Park	System voltage
		Engine: Idling Shift range: 2nd	7 - 9 V
130	OD solenoid valve	Engine: Idling Shift range: 3rd	System voltage
		Engine: Idling Shift range: Park	7 - 9 V

<4M4>

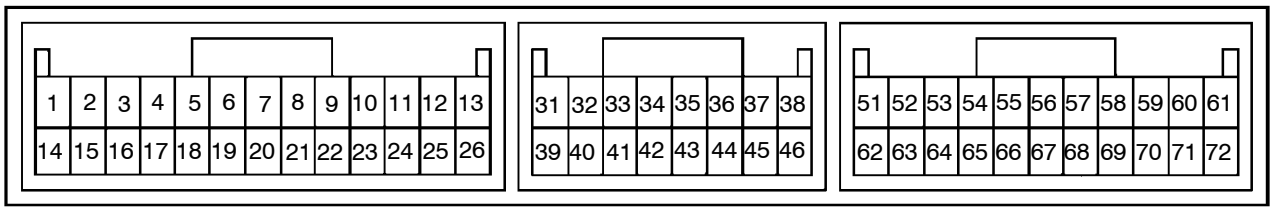

9FA0133

Terminal No.	Check item	Inspection conditions	Standard value
1	UD solenoid valve	Engine: Idling Shift range: 1st	System voltage
		Engine: Idling Shift range: Park	7 - 9 V
2	Solenoid valve power supply	Ignition switch: OFF	0 V
		Ignition switch: ON	System voltage
3	Solenoid valve power supply	Ignition switch: OFF	0 V
		Ignition switch: ON	System voltage
4	1st shift indicator lamp	Shift range: 1st	System voltage
		Shift range: Other than the above	0 V
5	3rd shift indicator lamp	Shift range: 3rd	System voltage
		Shift range: Other than the above	0 V
6	5th shift indicator lamp	Shift range: 5th	System voltage
		Shift range: Other than the above	0 V
9	4LLc switch	Transfer lever: 4LLc	System voltage
		Transfer lever: Other than the above	0 V

Terminal No.	Check item	Inspection conditions	Standard value
10	A/C compressor load signal	A/C switch: OFF	0 V
		A/C switch: ON	System voltage
11	Power supply	Ignition switch: OFF	0 V
		Ignition switch: ON	System voltage
12	Earth	At all times	0 V
13	Earth	At all times	0 V
14	OD solenoid valve	Engine: Idling Shift range: 3rd	System voltage
		Engine: Idling Shift range: Park	7 - 9 V
15	DCC solenoid valve	Engine: Idling Shift range: 1st	System voltage
16	2nd solenoid valve	Engine: Idling Shift range: 2nd	System voltage
		Engine: Idling Shift range: Park	7 - 9 V
17	2nd shift indicator lamp	Shift range: 2nd	System voltage
		Shift range: Other than the above	0 V
18	4th shift indicator lamp	Shift range: 4th	System voltage
		Shift range: Other than the above	0 V
24	Power supply	Ignition switch: OFF	0 V
		Ignition switch: ON	System voltage
25	Earth	At all times	0 V
26	Earth	At all times	0 V
31	Input shaft speed sensor	Measure between terminals (31) and (43) using an oscilloscope. Engine: 2 000 r/min Shift range: 4th	Check Procedure using an Oscilloscope (Refer to P.23-69.)
32	Output shaft speed sensor	Measure between terminals (32) and (43) using an oscilloscope. Engine: 2 000 r/min Shift range: 4th	Check Procedure using an Oscilloscope (Refer to P.23-69.)
33	Engine speed sensor	Engine: Idling	2.0 - 2.4 V
38	Backup power supply	At all times	System voltage
43	Sensor earth	At all times	0 V
44	A/T fluid temperature sensor	A/T fluid temperature 20°C	3.8 - 4.0 V
		A/T fluid temperature 40°C	3.2 - 3.4 V
		A/T fluid temperature 80°C	1.7 - 1.9 V
45	Accelerator pedal position sensor (APS)	Accelerator pedal: Fully closed (engine stopped)	0.985 - 1.085 V
		Accelerator pedal: Fully open (engine stopped)	4.0 V or higher
51	RED solenoid valve	Engine: Idling Shift range: 5th	System voltage
		Engine: Idling Shift range: Park	7 - 9 V
53	Output communication with engine-ECU	Engine: Idling Selector lever position: D	Other than 0 V

Terminal No.	Check item	Inspection conditions	Standard value
54	Input communication with engine-ECU	Engine: Idling Selector lever position: D	Other than 0 V
55	Inhibitor switch P	Ignition switch: ON Selector lever position: P	System voltage
		Ignition switch: ON Selector lever position: Other than the above	0 V
56	Inhibitor switch N	Ignition switch: ON Selector lever position: N	System voltage
		Ignition switch: ON Selector lever position: Other than the above	0 V
57	Select switch	Ignition switch: ON Selector lever operation: Sports mode	System voltage
		Ignition switch: ON Selector lever operation: Other than the above	0 V
58	Downshift switch	Ignition switch: ON Selector lever position: Downshifted in Sports mode and lever held	System voltage
		Ignition switch: ON Selector lever operation: Other than the above	0 V
59	Stop lamp switch	Ignition switch: ON Brake pedal Depressed	System voltage
		Ignition switch: ON Brake pedal Released	0 V
62	DIR solenoid valve	Engine: Idling Shift range: Park	System voltage
		Engine: Idling Shift range: 2nd	7 - 9 V
65	Wide open throttle switch	Accelerator pedal: Released	4.5 - 5.5 V
		Accelerator pedal: Depressed	Less than 0.4 V
66	Inhibitor switch R	Ignition switch: ON Selector lever position: R	System voltage
		Ignition switch: ON Selector lever position: Other than the above	0 V
67	Inhibitor switch D	Ignition switch: ON Selector lever position: D	System voltage
		Ignition switch: ON Selector lever position: Other than the above	0 V
68	Upshift switch	Ignition switch: ON Selector lever position: Upshifted in Sports mode and lever held	System voltage
		Ignition switch: ON Selector lever position: Other than the above	0 V
69	Vehicle speed sensor	When stopped	0 V
		When starting to drive forward slowly.	0 V and 5 V alternates
71	A/T control relay	Ignition switch: OFF	0 V
		Ignition switch: ON	10 - 12 V
72	Earth	Ignition switch: ON	0 V

CHECK PROCEDURE USING AN OSCILLOSCOPE

Check item	Inspection conditions		Normal condition (Wave pattern sample)
Crank angle sensor	Selector lever position: N	Idling (vehicle stopped)	Wave pattern A
Input shaft speed sensor	Shift range: 4th	Driving at a constant speed of 50 km/h in 4th (Engine: 1 800 - 2 100 r/min)	Wave pattern B
Output shaft speed sensor			
Vehicle speed sensor			
LR solenoid valve	Ignition switch: ON Engine: Stopped Selector lever position: P Throttle (accelerator) opening angle voltage: Less than 1 V <6G7>, less than 1.2 V <4M4>	Force-drive the solenoid valves (actuator test).	Wave pattern C
UD solenoid valve			
2nd solenoid valve			
OD solenoid valve			
RED solenoid valve			
DCC solenoid valve			

Wave pattern sample

Wave pattern A	Wave pattern B	Wave pattern C
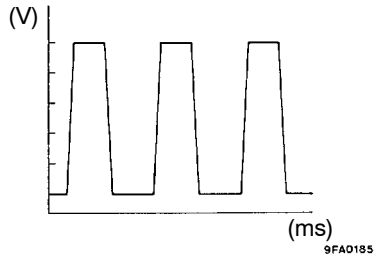	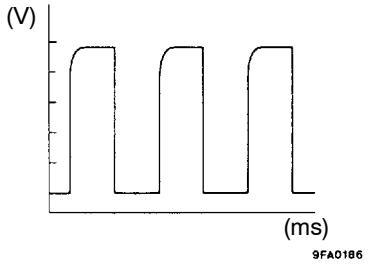	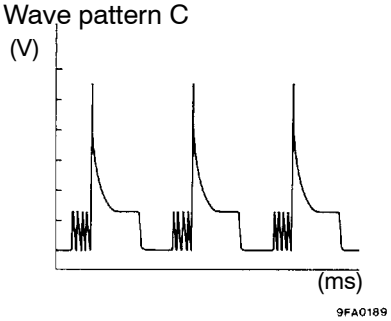

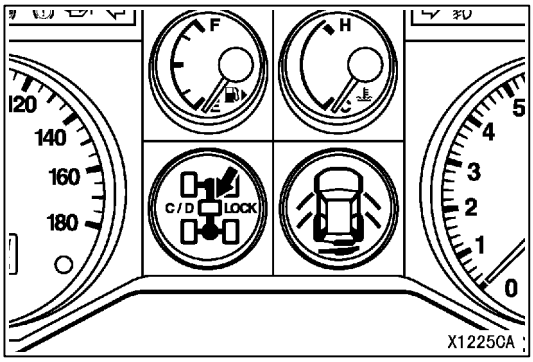

TROUBLESHOOTING <SS4 II>

DIAGNOSIS FUNCTION

CENTER DIFFERENTIAL LOCK LAMP

When a problem occurs in the transfer system, the center differential lock lamp flashes at a rate of 1 Hz.
When the center differential lock lamp is flashing at a rate of 1 Hz, check the diagnosis output.

READING DIAGNOSIS CODES

Use the MUT-II or the center differential lock lamp to read the diagnosis codes. (Refer to GROUP 00 - Guide to Troubleshooting and Inspection Procedures.)

CHART CLASSIFIED BY DIAGNOSIS CODE

Diagnosis code	Diagnosis item		Reference page
11	Power supply voltage system	Voltage drop	23-72
12		Overvoltage	23-72
13	Main relay system (inside ECU)	Relay problem	23-72
21	Accelerator pedal position sensor (APS) system	Open circuit/Malfunction of sensor	23-73
22	Front propeller shaft speed sensor system	Open circuit/Short-circuit/Malfunction of sensor	23-75
23			
24	Rear propeller shaft speed sensor system	Open circuit/Short-circuit/Malfunction of sensor	23-77
25			
26	Stop lamp switch system	Open circuit/Short-circuit/Malfunction of lamp/Malfunction of switch	23-79
31	Transfer shift lever switch system	Open circuit/Short-circuit/Malfunction of switch	23-80
32	Transfer position switch system	Malfunction of transfer shift mechanism/Malfunction of actuator	23-81
33	Transfer position switch system	Open circuit/Short-circuit/Malfunction of switch	23-81
34	Freewheel engage solenoid valve system	Open circuit/Short-circuit/Malfunction of solenoid valve	23-82

Diagnosis code	Diagnosis item		Reference page
35	Freewheel engage switch system	Open circuit/Short-circuit/Malfunction of switch	23-83
41	Shift actuator (short-circuit/open circuit) system	Open circuit/Short-circuit/Malfunction of actuator/Malfunction of ECU	23-84
42	Shift actuator (short-circuit) system	Short-circuit/Malfunction of actuator/Malfunction of ECU	23-85
43	Shift actuator (open circuit) system	Open circuit/Malfunction of actuator/Malfunction of ECU	
44	Shift actuator (overload) system	Malfunction of transfer shift mechanism/Malfunction of actuator	23-86
45	Tyre problem	Incorrect tyre pressure/Uneven tyre sizes	23-86
51	Malfunction of transfer-ECU		23-86

INSPECTION PROCEDURES CLASSIFIED BY DIAGNOSIS CODE

Code No. 11, 12 Power supply voltage system	Probable cause
Code No. 11 is output to indicate a drop in voltage if the power supply voltage drops below 9.5 V. Code No. 12 is output to indicate overvoltage if the power supply voltage rises above 18 V.	• Malfunction of ignition switch • Malfunction of harness or connector • Malfunction of transfer-ECU

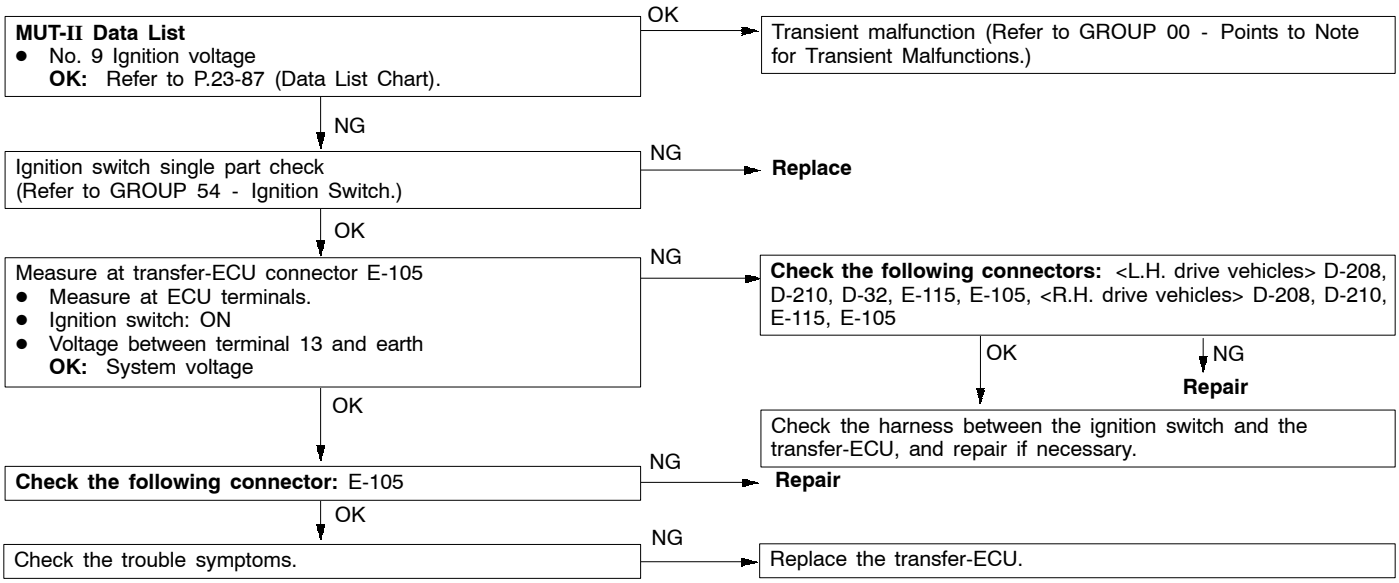

Code No. 13 Main relay (inside ECU) system	Probable cause
Code No. 13 is output to indicate a relay malfunction if the voltage rises to 6 V or higher when the relay is off, or if it drops below 6 V when the relay is on.	• Malfunction of transfer-ECU

Replace the transfer-ECU.

Code No. 21 Accelerator pedal position sensor (APS) system	Probable cause
Code No. 21 is output to indicate an open circuit in the APS or an incorrect adjustment when the APS output voltage drops below 0.2 V while the engine is idling.	• Malfunction of APS • Malfunction of harness or connector • Malfunction of transfer-ECU • Malfunction of throttle valve controller <6G7> • Malfunction of engine-ECU <4M4>

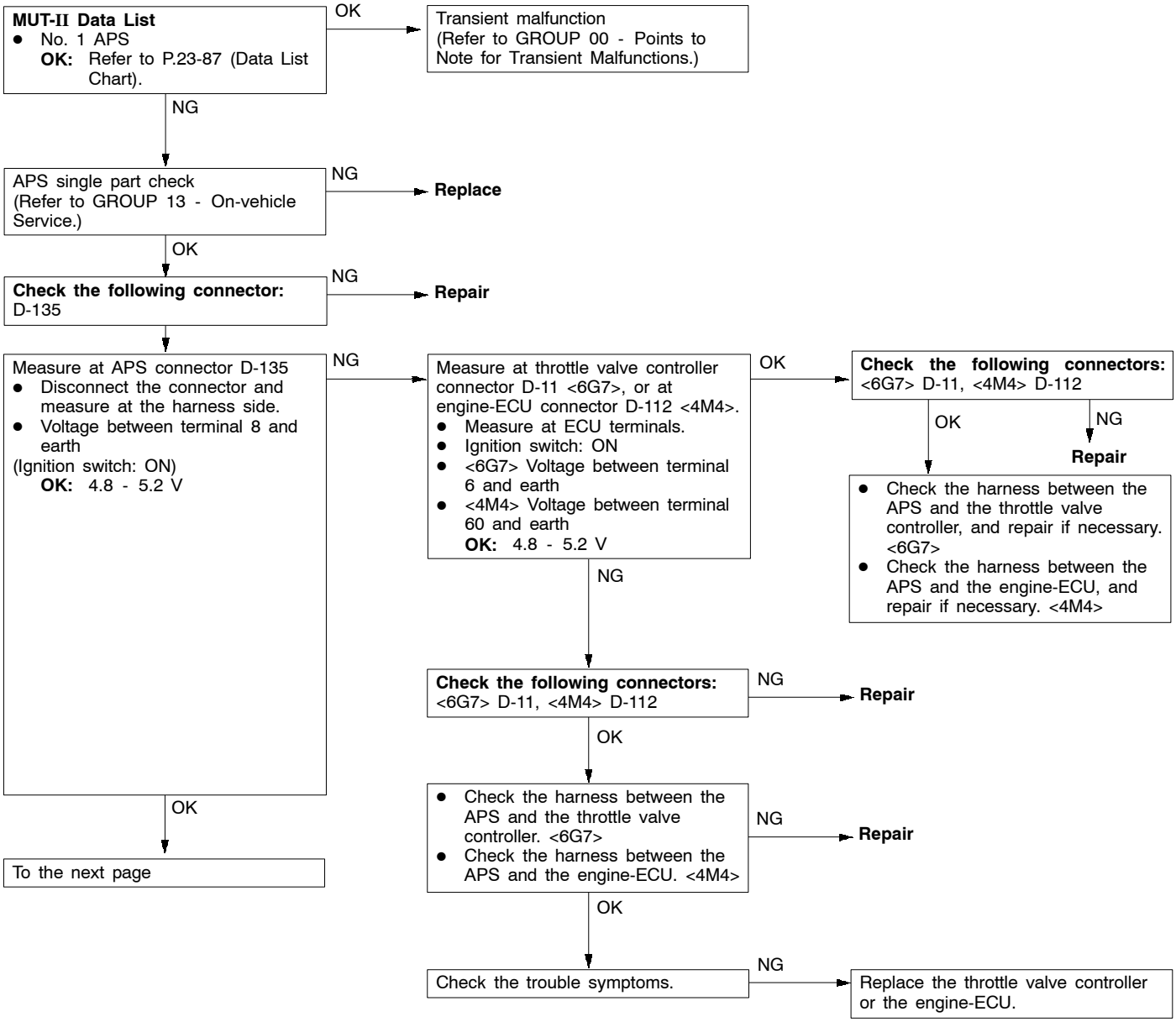

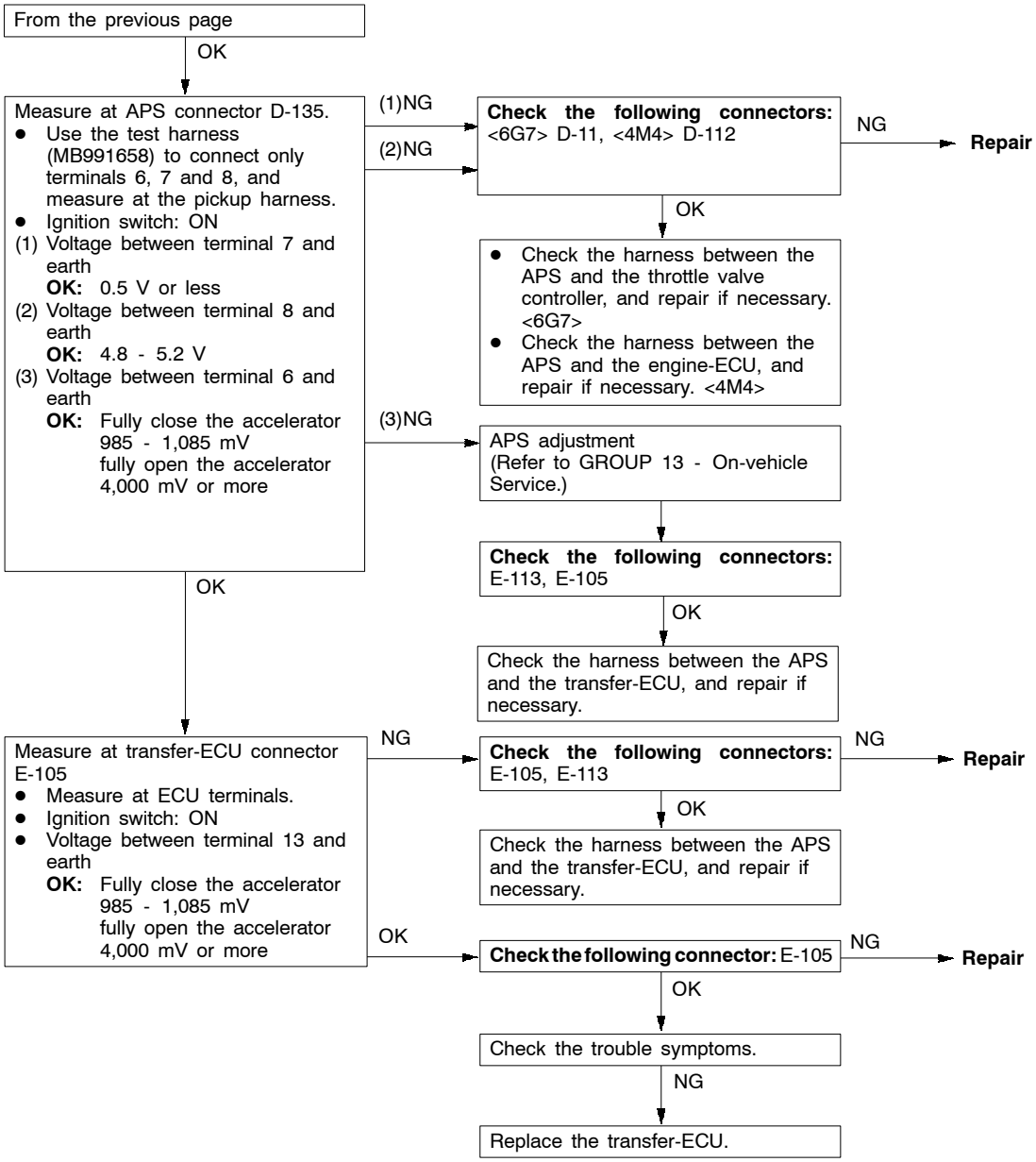
From the previous page
OK
Measure at APS connector D-135.
● Use the test harness (MB991658) to connect only terminals 6, 7 and 8, and measure at the pickup harness.
● Ignition switch: ON
(1) Voltage between terminal 7 and earth
OK: 0.5 V or less
(2) Voltage between terminal 8 and earth
OK: 4.8 - 5.2 V
(3) Voltage between terminal 6 and earth
OK: Fully close the accelerator 985 - 1,085 mV
fully open the accelerator 4,000 mV or more
(1)NG
(2)NG
Check the following connectors: <6G7> D-11, <4M4> D-112
NG
Repair
OK
● Check the harness between the APS and the throttle valve controller, and repair if necessary. <6G7>
● Check the harness between the APS and the engine-ECU, and repair if necessary. <4M4>
(3)NG
APS adjustment (Refer to GROUP 13 - On-vehicle Service.)
Check the following connectors: E-113, E-105
OK
Check the harness between the APS and the transfer-ECU, and repair if necessary.
OK
Measure at transfer-ECU connector E-105
● Measure at ECU terminals.
● Ignition switch: ON
● Voltage between terminal 13 and earth
OK: Fully close the accelerator 985 - 1,085 mV
fully open the accelerator 4,000 mV or more
NG
Check the following connectors: E-105, E-113
NG
Repair
OK
Check the harness between the APS and the transfer-ECU, and repair if necessary.
OK
Check the following connector: E-105
NG
Repair
OK
Check the trouble symptoms.
NG
Replace the transfer-ECU.

Code No. 22, 23 Front propeller shaft speed sensor system	Probable cause
Code No. 22 is output to indicate an open circuit or short-circuit in the front propeller shaft speed sensor if no signal is input from the front propeller shaft speed sensor when shifting from 2WD to 4WD while driving at medium to low speeds. Code No. 23 is output to indicate an open circuit or short-circuit in the front propeller shaft speed sensor if the signal input from the front propeller shaft speed sensor is unstable when the freewheel engage switch is on.	● Malfunction of front propeller shaft speed sensor ● Malfunction of harness or connector ● Malfunction of transfer-ECU

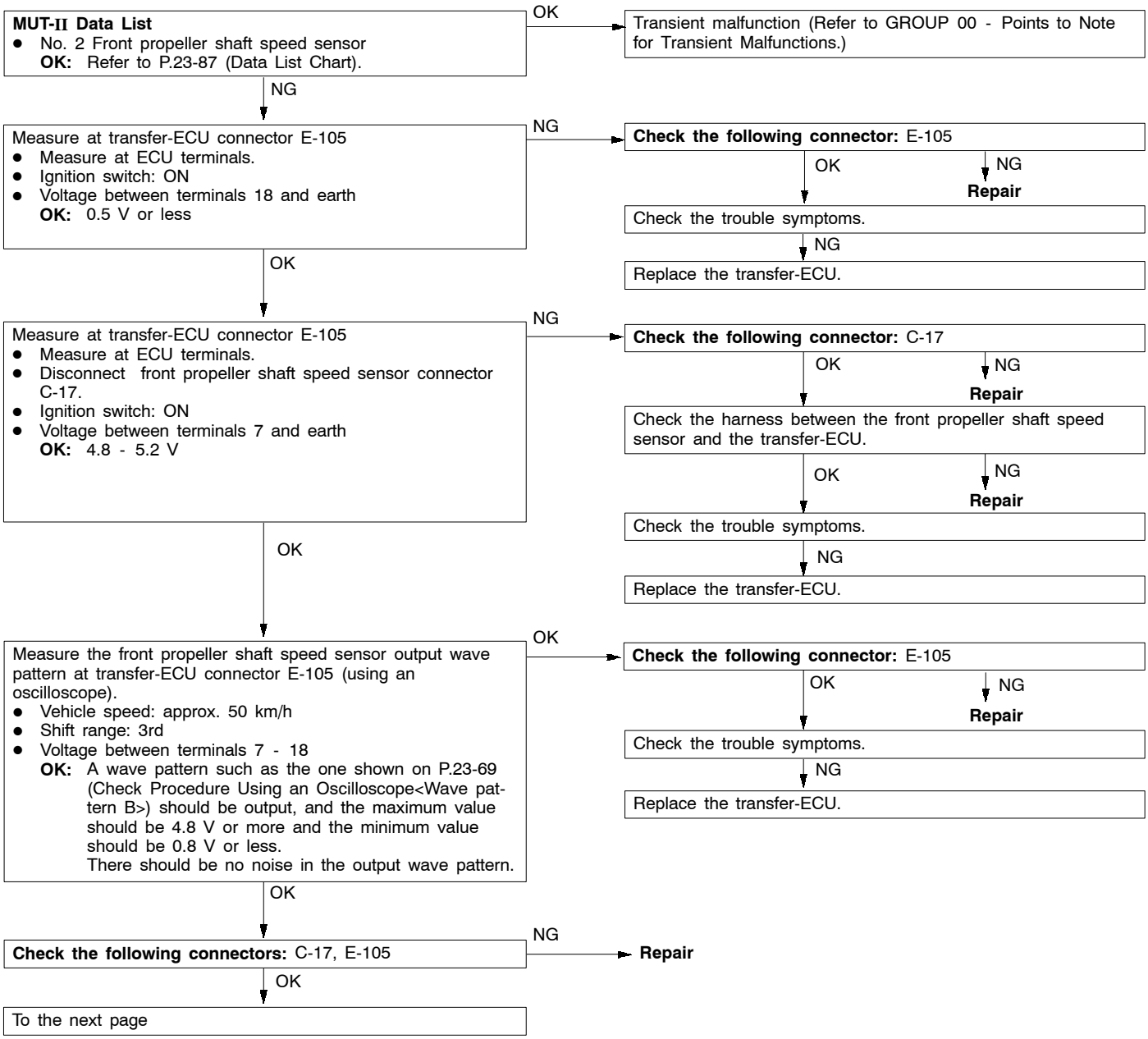

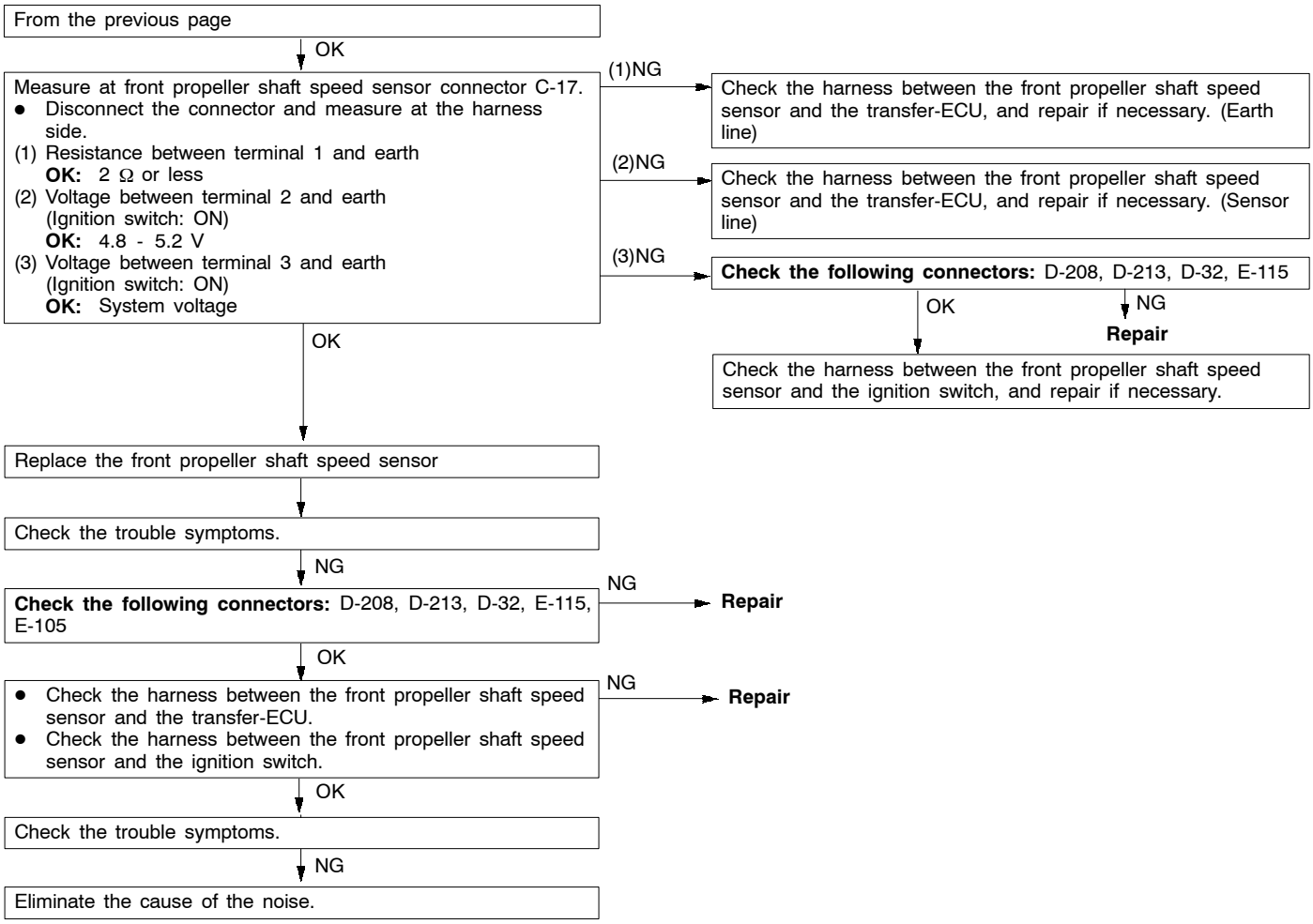
From the previous page
OK
Measure at front propeller shaft speed sensor connector C-17.
● Disconnect the connector and measure at the harness side.
(1) Resistance between terminal 1 and earth
OK: 2 Ω or less
(2) Voltage between terminal 2 and earth (Ignition switch: ON)
OK: 4.8 - 5.2 V
(3) Voltage between terminal 3 and earth (Ignition switch: ON)
OK: System voltage
(1)NG
Check the harness between the front propeller shaft speed sensor and the transfer-ECU, and repair if necessary. (Earth line)
(2)NG
Check the harness between the front propeller shaft speed sensor and the transfer-ECU, and repair if necessary. (Sensor line)
(3)NG
Check the following connectors: D-208, D-213, D-32, E-115
OK
NG
Repair
Check the harness between the front propeller shaft speed sensor and the ignition switch, and repair if necessary.
OK
Replace the front propeller shaft speed sensor
Check the trouble symptoms.
NG
Check the following connectors: D-208, D-213, D-32, E-115, E-105
NG
Repair
OK
● Check the harness between the front propeller shaft speed sensor and the transfer-ECU.
● Check the harness between the front propeller shaft speed sensor and the ignition switch.
NG
Repair
OK
Check the trouble symptoms.
NG
Eliminate the cause of the noise.

Code No. 24, 25 Rear propeller shaft speed sensor system	Probable cause
Code No. 24 is output to indicate an open circuit or short-circuit in the rear propeller shaft speed sensor if the signal input from the rear propeller shaft speed sensor is unstable when the APS voltage is 1.5 V or higher. Code No. 25 is output to indicate an open circuit or short-circuit in the rear propeller shaft speed sensor if the signal input from the rear propeller shaft speed sensor is unstable when the freewheel engage switch is on.	● No. 3 Rear propeller shaft speed sensor ● Malfunction of harness or connector ● Malfunction of transfer-ECU

MUT-II Data List
- No. 3 Rear propeller shaft speed sensor
  OK: Refer to P.23-87 (Data List Chart).

OK → Transient malfunction (Refer to GROUP 00 - Points to Note for Transient Malfunctions.)

NG ↓

Measure at transfer-ECU connector E-105
- Measure at ECU terminals.
- Ignition switch: ON
- Voltage between terminals 18 and earth
  OK: 0.5 V or less

NG → **Check the following connector:** E-105
- OK → Check the trouble symptoms.
  - NG → Replace the transfer-ECU.
- NG → **Repair**

OK ↓

Measure at transfer-ECU connector E-105
- Measure at ECU terminals.
- Disconnect rear propeller shaft speed sensor connector C-08.
- Ignition switch: ON
- Voltage between terminals 9 and earth
  OK: 4.8 - 5.2 V

NG → **Check the following connector:** C-08
- OK → Check the harness between the rear propeller shaft speed sensor and the transfer-ECU.
  - OK → Check the trouble symptoms.
    - NG → Replace the transfer-ECU.
  - NG → **Repair**
- NG → **Repair**

OK ↓

Measure the rear propeller shaft speed sensor output wave pattern at transfer-ECU connector E-105 (using an oscilloscope).
- Vehicle speed: approx. 50 km/h
- Shift range: 3rd
- Voltage between terminals 9 - 18
  OK: A wave pattern such as the one shown on P.23-69 (Check Procedure Using an Oscilloscope) should be output, and the maximum value should be 4.8 V or more and the minimum value should be 0.8 V or less.
  There should be no noise in the output wave pattern.

OK → **Check the following connector:** E-108
- OK → Check the trouble symptoms.
  - NG → Replace the transfer-ECU.
- NG → **Repair**

OK ↓

Check the following connectors: C-08, E-108

NG → **Repair**

OK ↓

To the next page

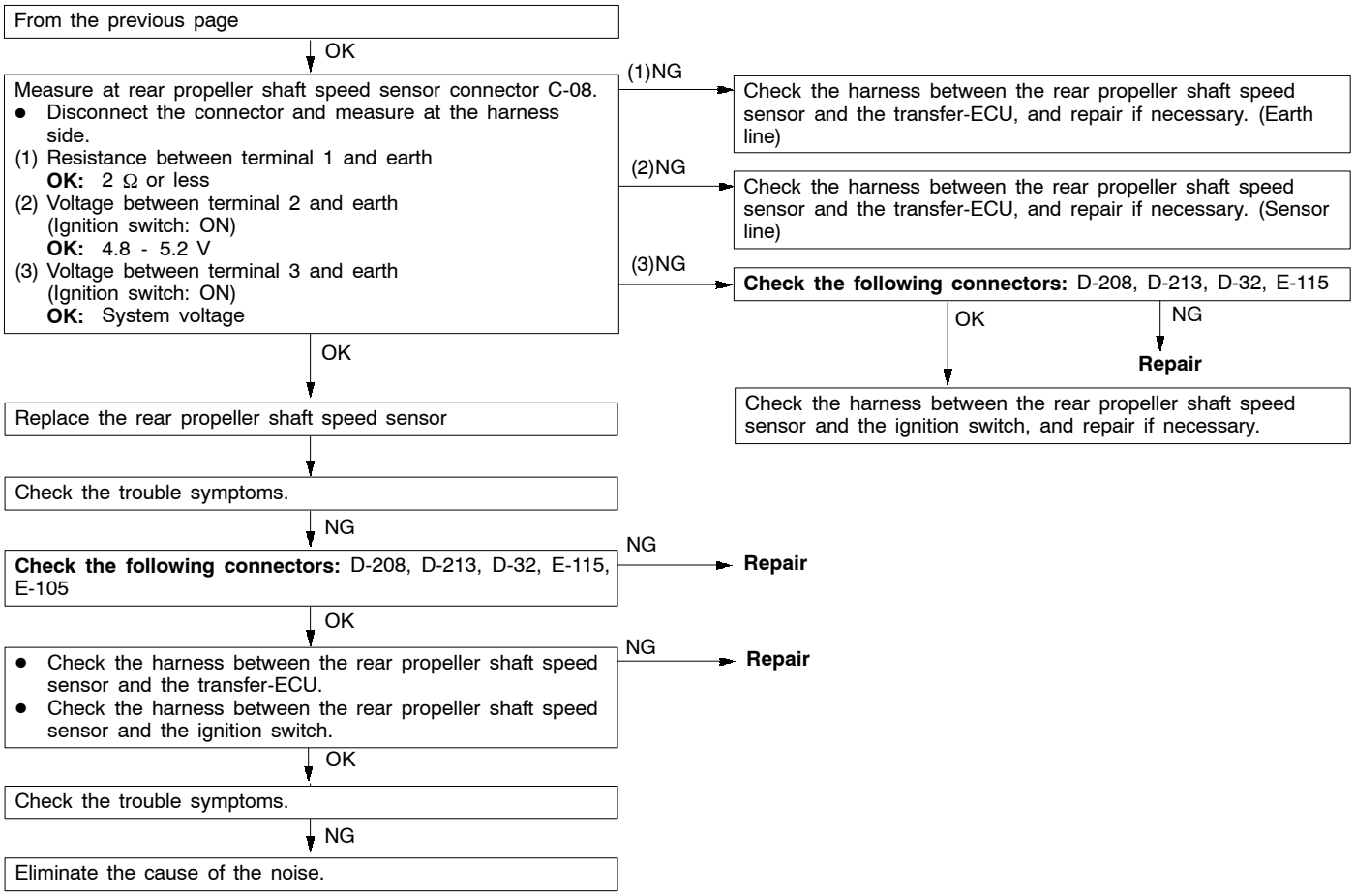
From the previous page
OK
Measure at rear propeller shaft speed sensor connector C-08.
● Disconnect the connector and measure at the harness side.
(1) Resistance between terminal 1 and earth
OK: 2 Ω or less
(2) Voltage between terminal 2 and earth (Ignition switch: ON)
OK: 4.8 - 5.2 V
(3) Voltage between terminal 3 and earth (Ignition switch: ON)
OK: System voltage
(1)NG
Check the harness between the rear propeller shaft speed sensor and the transfer-ECU, and repair if necessary. (Earth line)
(2)NG
Check the harness between the rear propeller shaft speed sensor and the transfer-ECU, and repair if necessary. (Sensor line)
(3)NG
Check the following connectors: D-208, D-213, D-32, E-115
OK
NG
Repair
Check the harness between the rear propeller shaft speed sensor and the ignition switch, and repair if necessary.
OK
Replace the rear propeller shaft speed sensor
Check the trouble symptoms.
NG
Check the following connectors: D-208, D-213, D-32, E-115, E-105
NG
Repair
OK
● Check the harness between the rear propeller shaft speed sensor and the transfer-ECU.
● Check the harness between the rear propeller shaft speed sensor and the ignition switch.
NG
Repair
OK
Check the trouble symptoms.
NG
Eliminate the cause of the noise.

Code No. 26 Stop lamp switch system	Probable cause
Code No. 26 is output to indicate a short-circuit in the stop lamp switch when the stop lamp switch is continuously on for 15 minutes or more when the vehicle speed is 15 km/h or higher.	• Malfunction of brake pedal • Malfunction of stop lamp switch • Malfunction of harness or connector • Malfunction of transfer-ECU

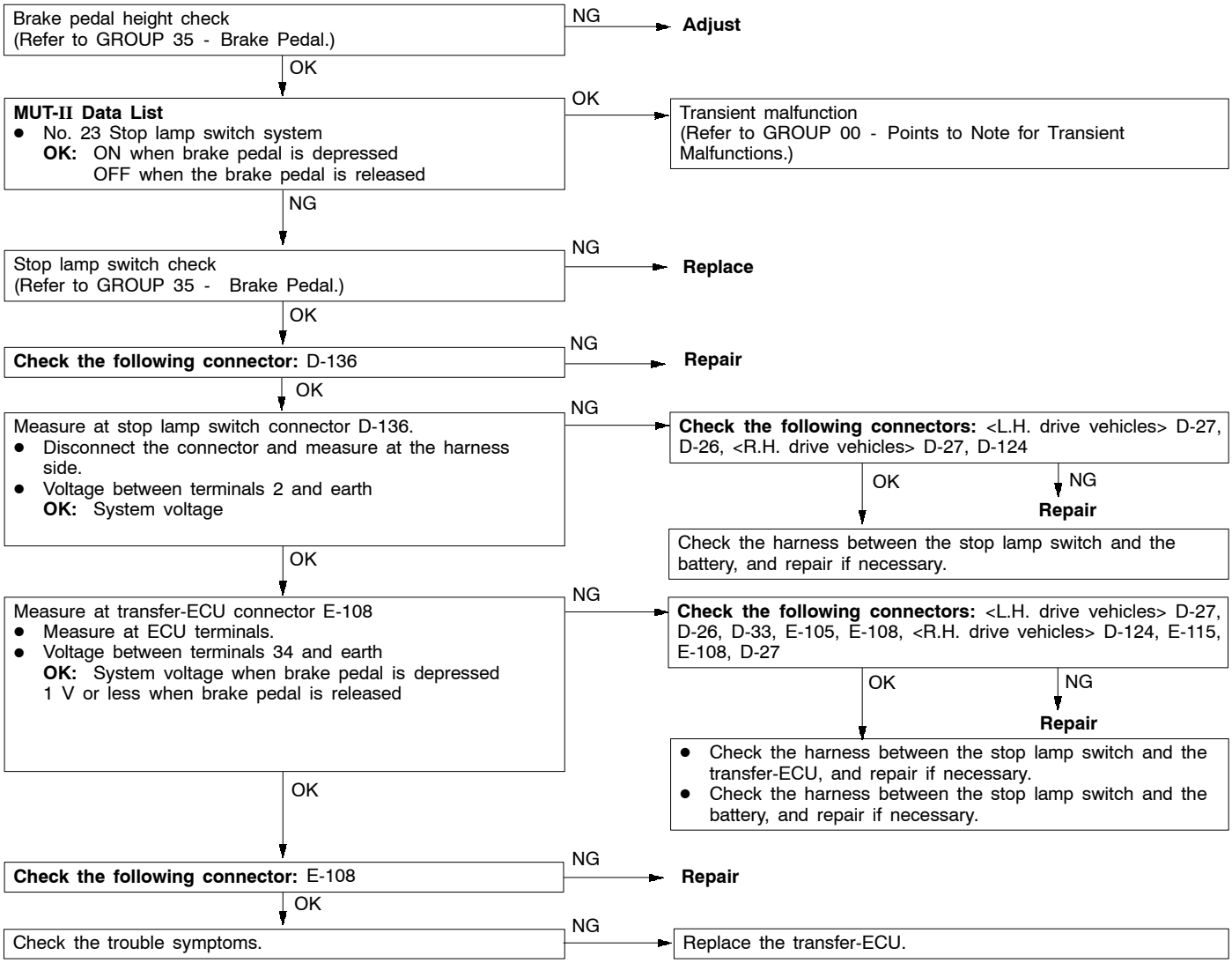

Code No. 31 Transfer lever switch system	Probable cause
Code No. 31 is output to indicate an open circuit or short-circuit in the transfer lever switch if the input signal from the transfer lever switch is unstable.	● Malfunction of transfer lever switch ● Malfunction of harness or connector ● Malfunction of transfer-ECU

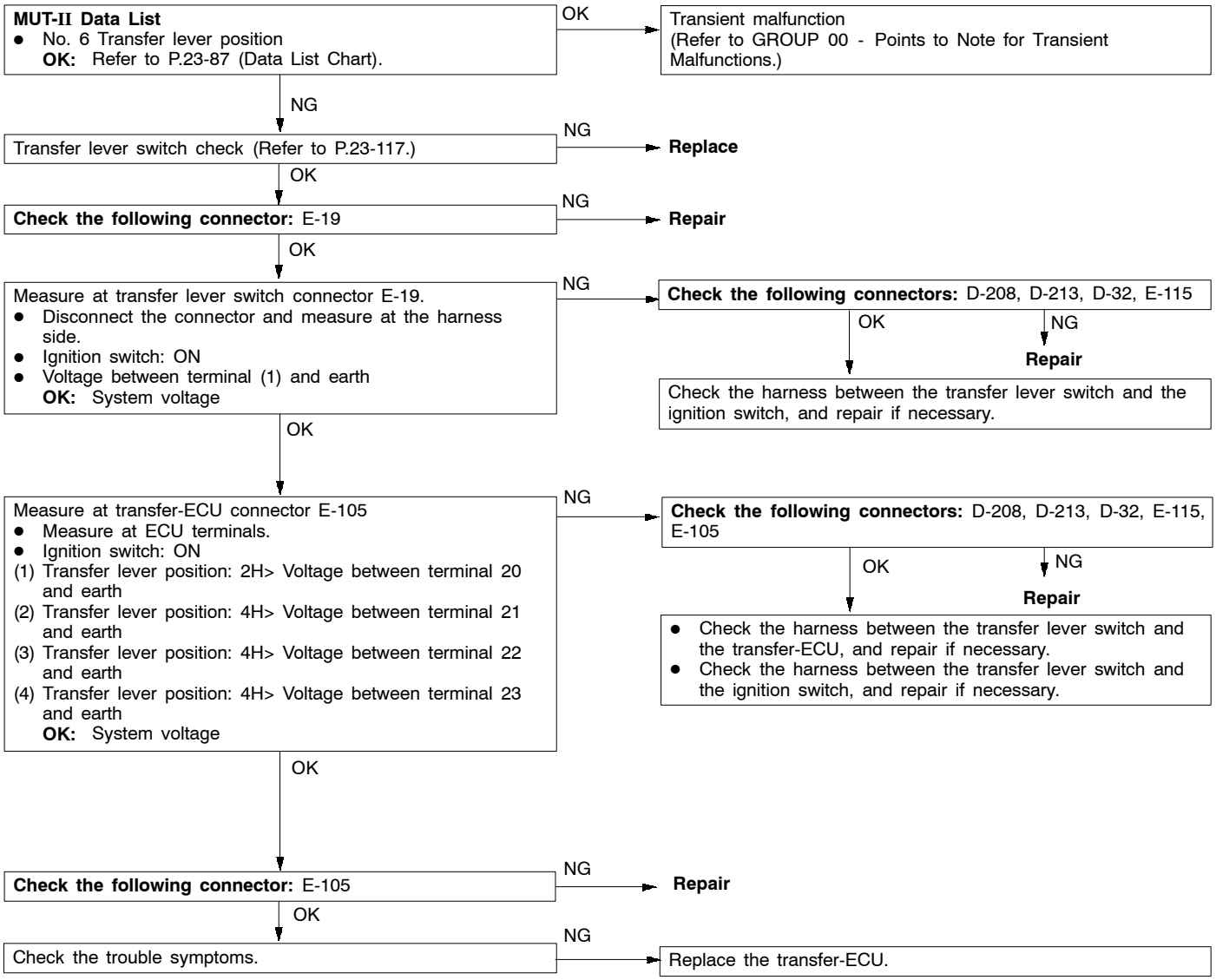

Code No. 32, 33 Transfer position switch system	Probable cause
Code No. 32 is output to indicate an open circuit or short-circuit in a transfer position switch, a malfunction of the shift actuator or a malfunction of the transfer shift mechanism when transfer selection does not complete while driving. Code No. 33 is output to indicate an open circuit or short-circuit in a transfer position switch if the input signal from the transfer position switch is unstable.	● Malfunction of transfer position switch ● Malfunction of harness or connector ● Malfunction of transfer-ECU ● Malfunction of shift actuator ● Malfunction of transfer shift mechanism

★ Refer to the Transmission Workshop Manual.

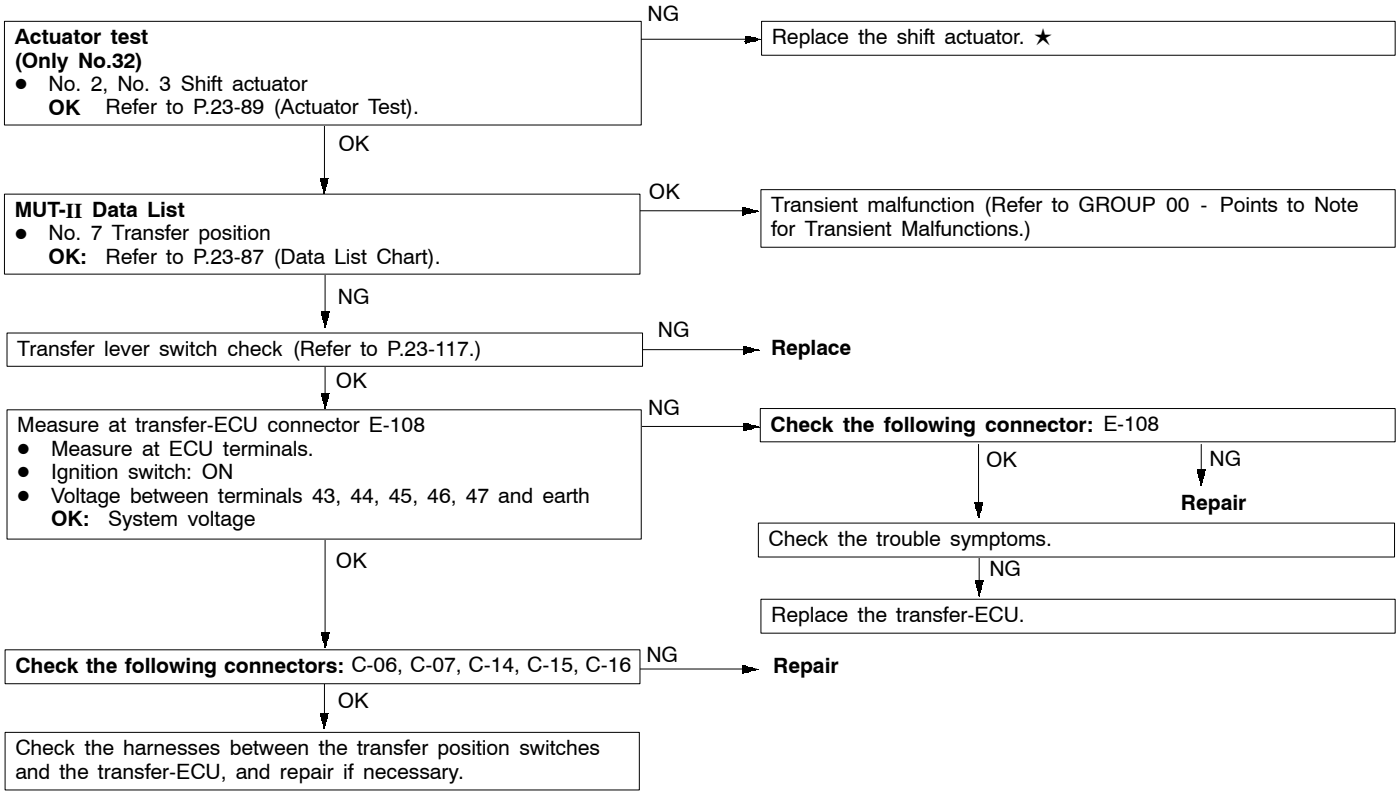

Code No. 34 Freewheel engage solenoid valve system	Probable cause
Code No. 34 is output to indicate an open circuit or short-circuit in the freewheel engage solenoid valve when the transfer-ECU terminal voltages are not the same while current is being supplied to the freewheel engage solenoid valve.	● Malfunction of freewheel engage solenoid valve ● Malfunction of harness or connector ● Malfunction of transfer-ECU

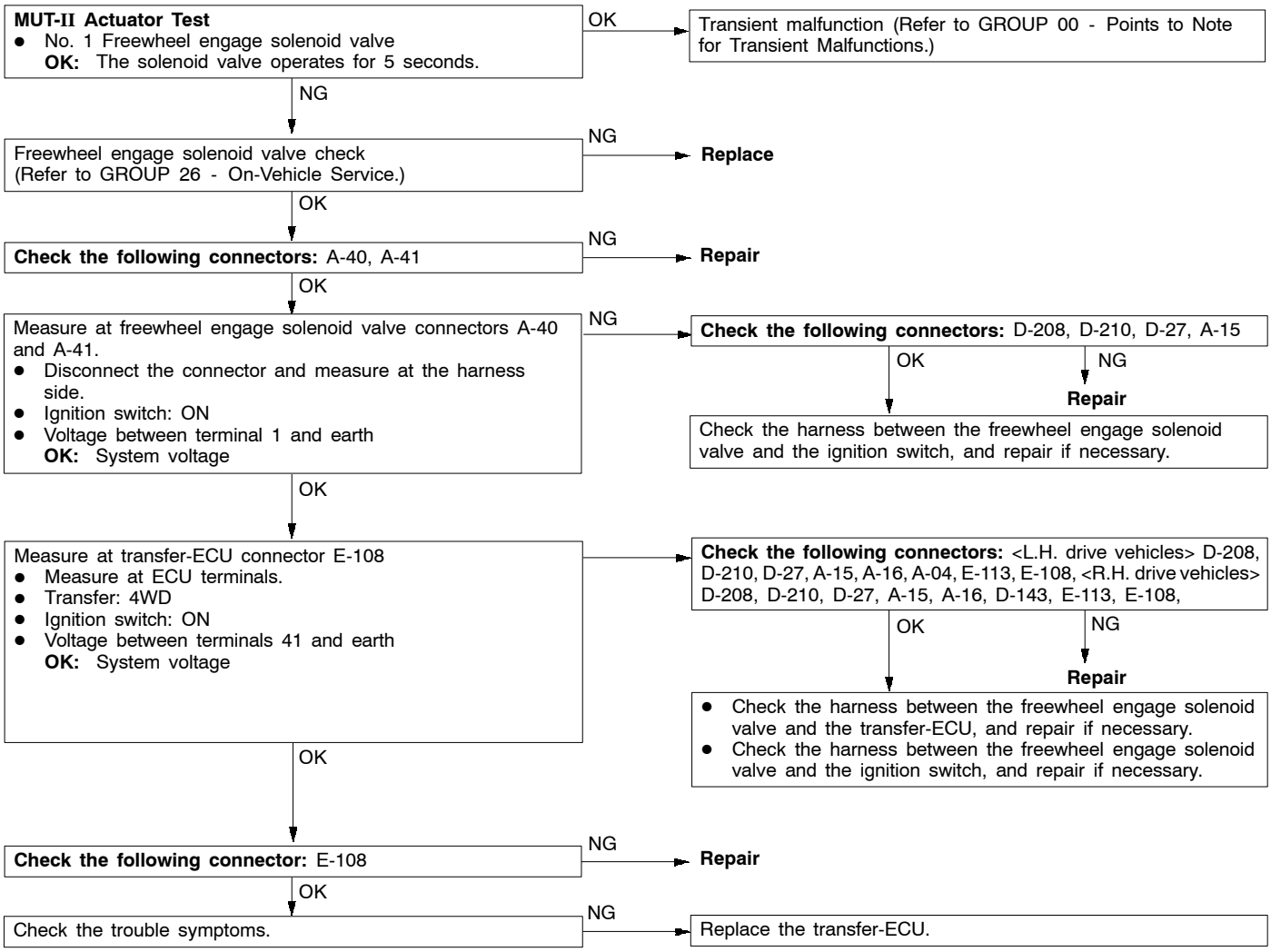

Code No. 35 Freewheel engage switch system	Probable cause
Code No. 35 is output to indicate an open circuit or short-circuit in the freewheel engage switch when the freewheel engage switch condition does not correspond to the fact that current is being supplied to the freewheel engage solenoid valve.	• Malfunction of freewheel engage switch • Malfunction of harness or connector • Malfunction of transfer-ECU

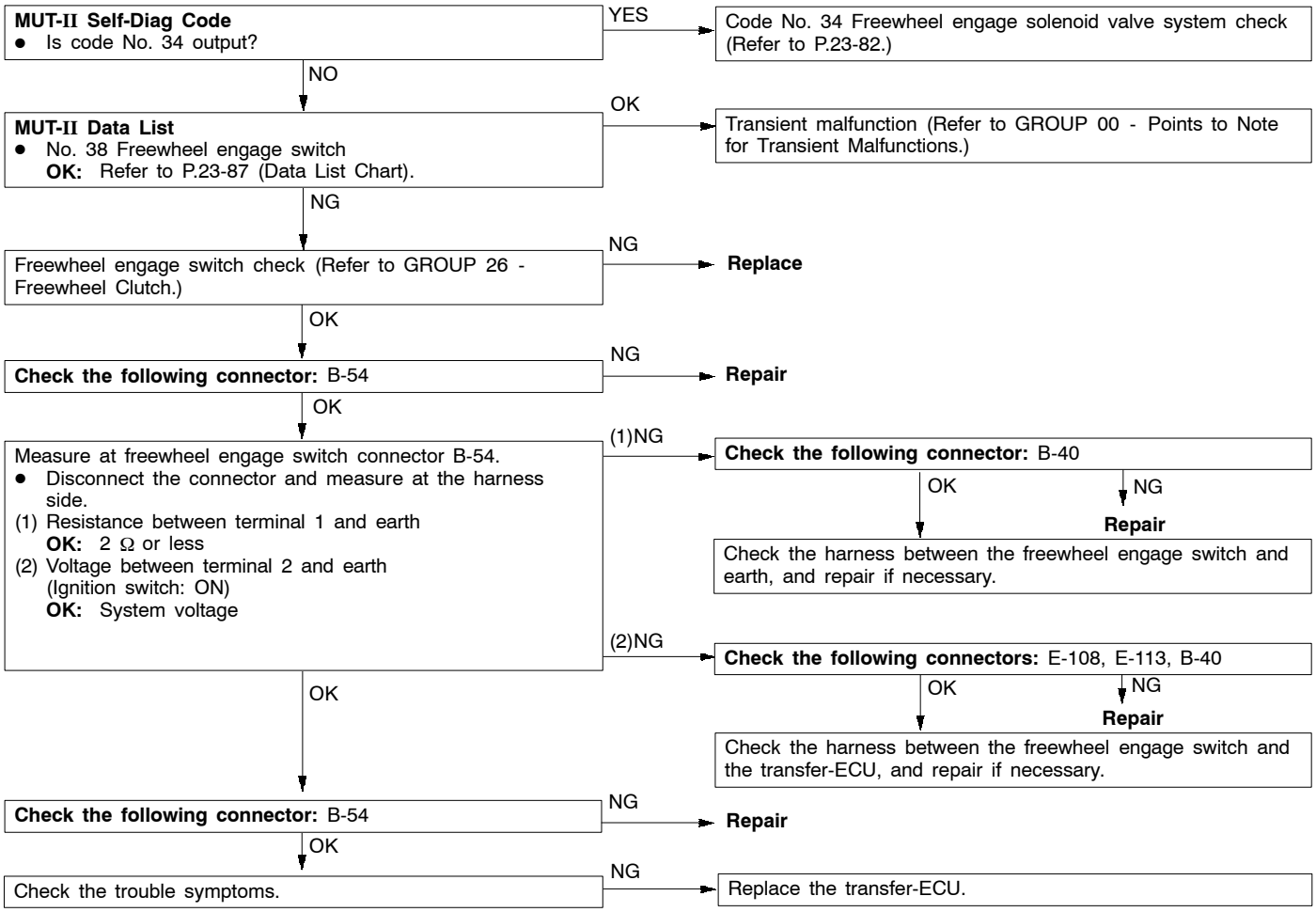

Code No. 41 Shift actuator system (open circuit or short-circuit)	Probable cause
Code No. 41 is output to indicate an open circuit or short-circuit in the shift actuator if the transfer-ECU terminal voltage is higher than the main relay voltage (90% of the rated voltage), or lower than the main relay voltage (10% of the rated voltage) when shift operation is not being carried out.	● Malfunction of shift actuator ● Malfunction of harness or connector ● Malfunction of transfer-ECU

★ Refer to the Transmission Workshop Manual.

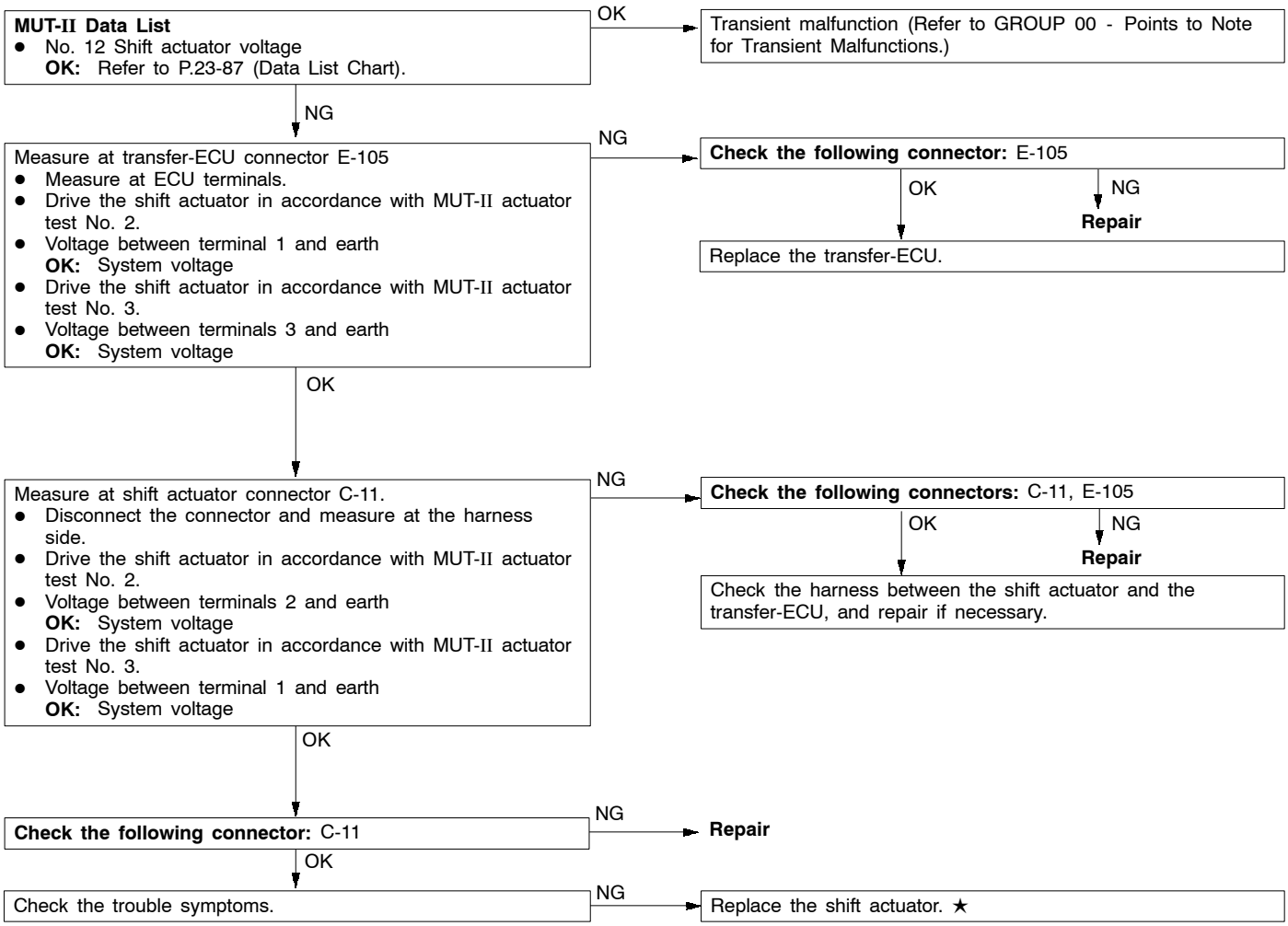

Code No. 42 Shift actuator system (short-circuit) Code No. 43 Shift actuator system (open circuit)	Probable cause
Code No. 42 is output to indicate a short-circuit in the shift actuator if the shift actuator current is +1 A greater than the target value while the actuator is being driven. Code No. 43 is output to indicate an open circuit in the shift actuator if the main relay voltage is lower than 6 V, or the shift actuator current is 0.1 A lower than the actual value while the actuator is being driven.	● Malfunction of shift actuator ● Malfunction of harness or connector ● Malfunction of transfer-ECU

★ Refer to the Transmission Workshop Manual.

MUT-II Data List
- No. 10 Shift actuator voltage
  OK: Refer to P.23-87 (Data List Chart).

OK → Transient malfunction (Refer to GROUP 00 - Points to Note for Transient Malfunctions.)

NG ↓

Measure at transfer-ECU connector E-105
- Measure at ECU terminals.
- Drive the shift actuator in accordance with MUT-II actuator test No. 2.
- Voltage between terminal 1 and earth
  OK: System voltage
- Drive the shift actuator in accordance with MUT-II actuator test No. 3.
- Voltage between terminals 3 and earth
  OK: System voltage

NG → **Check the following connector:** E-105
- OK → Replace the transfer-ECU.
- NG → **Repair**

OK ↓

Measure at shift actuator connector C-11.
- Disconnect the connector and measure at the harness side.
- ●rive the shift actuator in accordance with MUT-II actuator test No. 2.
- Voltage between terminals 2 and earth
  OK: System voltage
- Drive the shift actuator in accordance with MUT-II actuator test No. 3.
- Voltage between terminal 1 and earth
  OK: System voltage

NG → **Check the following connectors:** C-11, E-105
- OK → Check the harness between the shift actuator and the transfer-ECU, and repair if necessary.
- NG → **Repair**

OK ↓

Check the following connector: C-11

NG → **Repair**

OK ↓

Check the trouble symptoms.

NG → Replace the shift actuator. ★

Code No. 44 Shift actuator system (overload)	Probable cause
Code No. 44 is output to indicate an overload of the shift actuator when the total time calculated for driving the shift actuator exceeds 5 minutes.	● Malfunction of shift actuator ● Malfunction of harness or connector ● Malfunction of transfer-ECU ● Malfunction of transfer shift mechanism

★ Refer to the Transmission Workshop Manual.

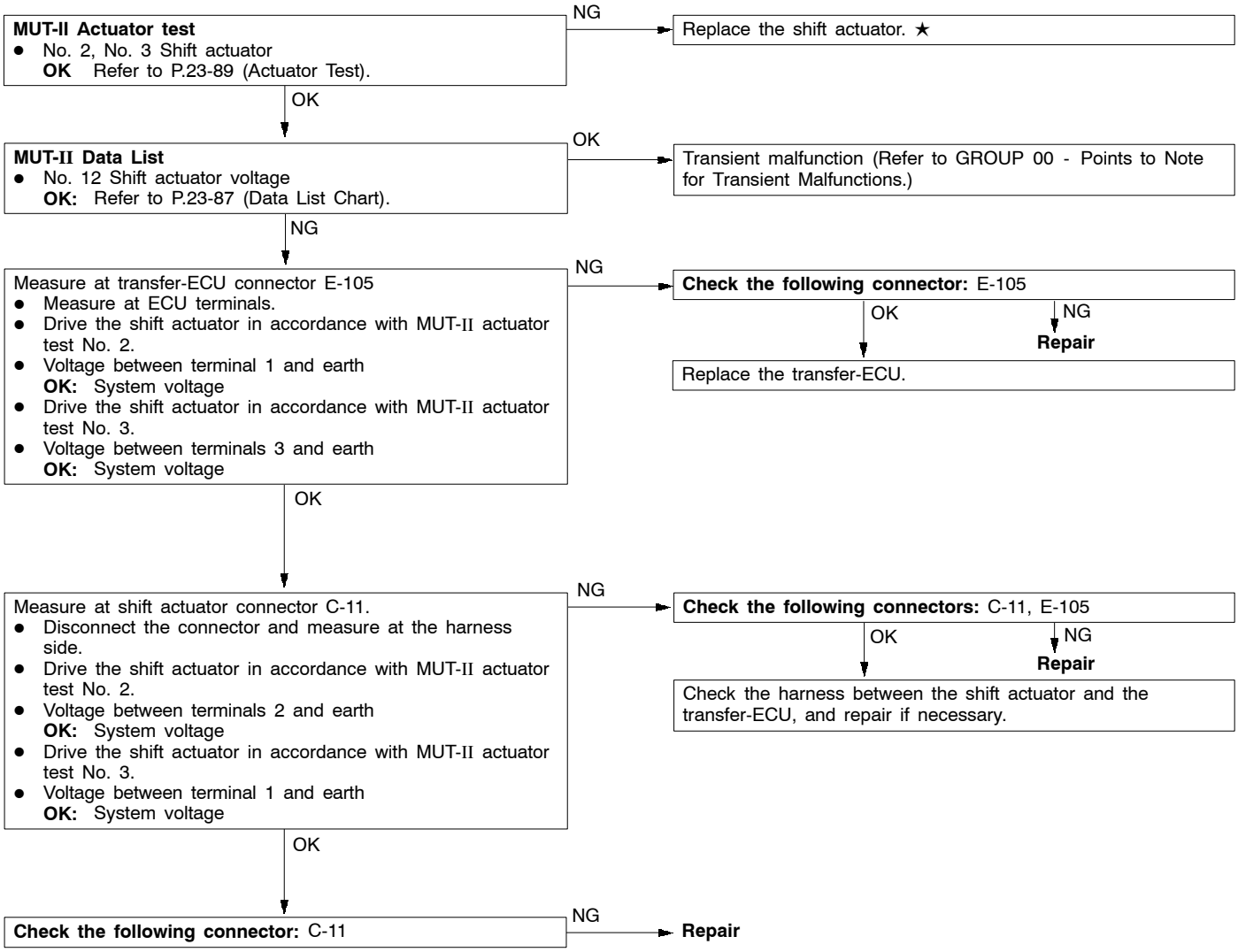

Code No. 45 Incorrect tyre diameters	Probable cause
Code No. 45 is output to indicate incorrect tyre pressure, uneven tyre sizes or non-uniform tyre brands, which have caused a large difference in speed between the front and rear wheel speeds and the setting values when the freewheel engage switch is on.	● Malfunction of tyre ● Malfunction of transfer-ECU

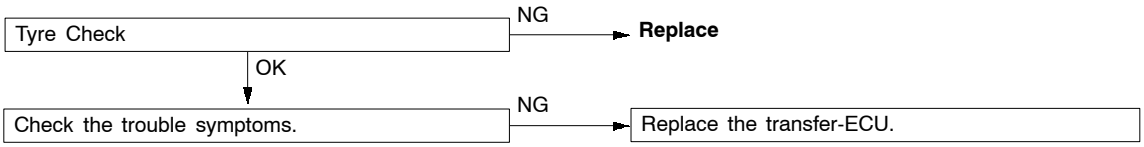

Code No. 51 Malfunction of transfer-ECU	Probable cause
Code No. 51 is output when a problem with the transfer-ECU is detected.	● Malfunction of transfer-ECU

Replace the transfer-ECU.

DATA LIST REFERENCE TABLE

Item No.	Check item	Inspection conditions		Normal condition
1	Accelerator pedal position sensor (APS)	Engine: Stopped Selector lever position: P	Accelerator pedal: Fully closed	985 - 1,085 mV
			Accelerator pedal: Depressed	Gradually increases from the above value.
			Accelerator pedal: Fully open	4000 mV or higher
2	Front propeller shaft speed sensor	Transfer position: 4WD	Driving at a constant speed of 30 km/h	30 km/h
3	Rear propeller shaft speed sensor	Transfer position: 4WD	Driving at a constant speed of 30 km/h	30 km/h
4	Difference between front and rear propeller shaft speeds	Transfer position: 4WD	Driving at a constant speed of 30 km/h	Within 5 km/h
5	Vehicle speed	Idling in 1st (Vehicle stopped)		0 km/h
		Driving at a constant speed of 50 km/h in 3rd		50 km/h
6	Transfer lever position	Ignition switch: ON Engine: Stopped	Transfer shift lever position: 2H	2H
			Transfer shift lever position: 4H	4H
			Transfer shift lever position: 4HLc	4HLc
			Transfer shift lever position: 4LLc	4LLc
7	Transfer position	Driving at a constant speed of 10 km/h	Transfer shift lever position: 2H → 4H	2H - 4H → 4H
			Transfer shift lever position: 4H → 4HLc	4H - 4HL → 4HL
		Engine: Stopped Selector lever position: N	Transfer shift lever position: 4HLc → 4LLc	4HL - 4LL → 4LL
			Transfer shift lever position: 4LLc → 4HLc	4HL - 4LL → 4HL
		Driving at a constant speed of 10 km/h	Transfer shift lever position: 4HLc → 4H	4H - 4HL → 4H
			Transfer shift lever position: 4H → 2H	2H - 4H → 2H
8	Main relay voltage	Ignition switch: ON		System voltage (V)
9	Ignition voltage	Ignition switch: ON		System voltage (V)
10	Shift actuator current	During transfer selection (while motor is running)		0 A → 0.2 A → 0 A
11	Target current	During transfer selection (while motor is running)		0 A → 1.5 A → 0 A
12	Shift actuator voltage	Ignition switch: ON Selector lever position: N Transfer shift lever position: 2H → 4H (or 4H → 4HLc, 4HLc → 4LLc)		System voltage (V)
		Ignition switch: ON Selector lever position: N Transfer shift lever position: 4LLc → 4HLc (or 4HLc → 4H, 4H → 2H)		System voltage (V)

Item No.	Check item	Inspection conditions		Normal condition
21	Ignition switch	Ignition switch: ON		ON
		Ignition switch: OFF		OFF
22	Transmission identification	Vehicles with A/T		A/T
23	Stop lamp switch	Ignition switch: ON Engine: Stopped	Brake pedal: Depressed	ON
			Brake pedal: Released	OFF
24	Transfer lever switch 2H	Transfer shift lever position: 2H		ON
		Transfer shift lever position: Other than the above		OFF
25	Transfer lever switch 4H	Transfer shift lever position: 4H		ON
		Transfer shift lever position: Other than the above		OFF
26	Transfer lever switch 4HLc	Transfer shift lever position: 4HLc		ON
		Transfer shift lever position: Other than the above		OFF
27	Transfer lever switch 4LLc	Transfer shift lever position: 4LLc		ON
		Transfer shift lever position: Other than the above		OFF
28	Engine identification	Petrol vehicles		PETROL
		Diesel vehicles		DIESEL
30	Freewheel engage solenoid valve	During 2WD		ON
		During 4WD		OFF
31	Inhibitor switch N	Selector lever position: N		ON
		Selector lever position: Other than the above		OFF
32	Inhibitor switch P	Selector lever position: P		ON
		Selector lever position: Other than the above		OFF
33	2WD switch	Driving conditions: 2WD (2H)		ON
		Driving conditions: Other than the above		OFF
34	2WD/4WD switch	Driving conditions: 2WD (2H), 4WD (4H)		ON
		Driving conditions: Other than the above		OFF
35	4H switch	Driving conditions: 4WD (4H), 4WD (4HLc)		ON
		Driving conditions: Other than the above		OFF
36	Center differential lock switch	Driving conditions: 4WD (4HLc), 4WD (4LLc)		ON
		Driving conditions: Other than the above		OFF
37	4LLc switch	Driving conditions: 4WD (4LLc)		ON
		Driving conditions: Other than the above		OFF
38	Freewheel engage switch	During 2WD		OFF
		During 4WD		ON

ACTUATOR TEST TABLE

Item No.	Check item	Test contents	Inspection conditions	Normal condition
1	Freewheel engage solenoid valve	The freewheel engage solenoid valve is driven.	Ignition switch: ON Selector lever position: P Engine: 0 r/min Vehicle speed: 0 km/h (vehicle stopped)	If the freewheel engage solenoid valve is on, it is turned off, and if it is off, it is turned on.
2	Shift actuator	The motor inside the shift actuator is run in the forward direction.		If the transfer is at the 2H, 4H or 4HLc position, it shifts from that position to the 2H, 4H, 4HLc, 4LLc positions in that order, and then returns to the original position. If it is at the 4LLc position, no shifting is carried out.
3		The motor inside the shift actuator is run in the reverse direction.		If the transfer is at the 4H, 4HLc or 4LLc position, it shifts from that position to the 4LLc, 4HLc , 4H, 2H positions in that order, and then returns to the original position. If it is at the 2H position, no shifting is carried out.

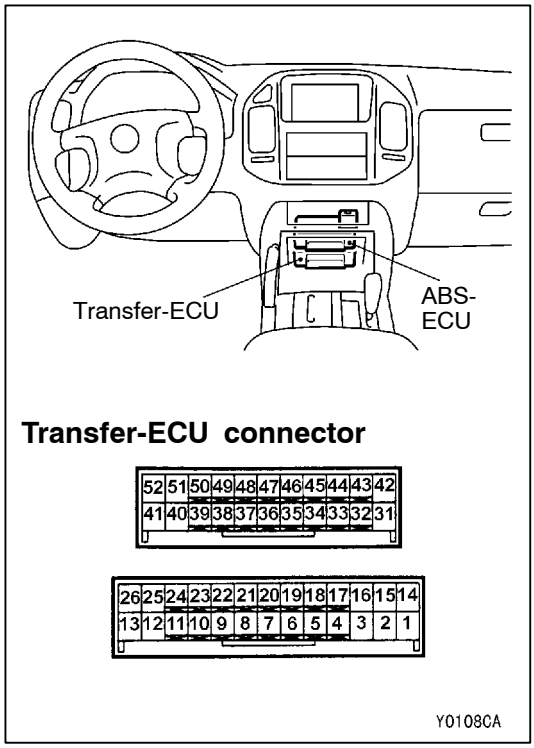

TRANSFER-ECU TERMINAL VOLTAGE TABLE

NOTE
There are two ECUs with the same shape inside the floor console, one above the other. The top ECU is the ABS-ECU, and it has a blue connector. The bottom ECU is the transfer-ECU, and it has a green connector.

Terminal No.	Check item	Inspection conditions	Standard value
1	Shift actuator	Transfer shift lever position: 2H → 4H	5.6 V → 11.0 V → 5.6 V
3	Shift actuator	Transfer shift lever position: 4H → 2H	5.6 V → 11.0 V → 5.6 V
5	Accelerator pedal position sensor (APS)	Accelerator pedal: Fully closed (engine stopped)	0.985 - 1.085 V
		Accelerator pedal: Fully open (engine stopped)	4.0 V or higher
7	Front propeller shaft speed sensor	Measure the voltage between terminals 7 and 18 using an oscilloscope. Engine: 2 000 r/min Shift range: 4th	Oscilloscope check procedure (Refer to P. 23-69 <Wave Pattern B>.)
9	Rear propeller shaft speed sensor	Measure the voltage between terminals 9 and 18 using an oscilloscope. Engine: 2 000 r/min Shift range: 4th	Oscilloscope check procedure (Refer to P. 23-69 <Wave Pattern B>.)
11	Diagnosis output	When normal (no diagnosis codes are output)	0 V and 5 V alternates
13	Power supply	Ignition switch: OFF	0 V
		Ignition switch: ON	System voltage
18	Sensor earth	At all times	0.5 V or less
20	Transfer lever switch 2H	Transfer shift lever position: 2H	System voltage
		Transfer shift lever position: Other than the above	0 V
21	Transfer lever switch 4H	Transfer shift lever position: 4H	System voltage
		Transfer shift lever position: Other than the above	0 V
22	Transfer lever switch 4HLc	Transfer shift lever position: 4HLc	System voltage
		Transfer shift lever position: Other than the above	0 V
23	Transfer lever switch 4LLc	Transfer shift lever position: 4LLc	System voltage
		Transfer shift lever position: Other than the above	0 V
24	Diagnosis control	–	–
25	Earth	At all times	0 V
26	Earth	At all times	0 V
31	Backup power supply	At all times	System voltage
32	Inhibitor switch N	Selector lever position: N	System voltage
		Selector lever position: Other than the above	0 V
33	Inhibitor switch P	Selector lever position: P	System voltage
		Selector lever position: Other than the above	0 V
34	Stop lamp switch	Brake pedal: Depressed	System voltage
		Brake pedal: Released	0 V
35	Earth	At all times	0 V
37	Rear wheel indicator lamp	Other than during transfer selection	System voltage
38	Front wheel indicator lamp	During 4WD	System voltage
39	Earth <6G7>	At all times	0 V

Terminal No.	Check item	Inspection conditions	Standard value
40	Center differential lock lamp	During 4WD (4HLc or 4LLc)	System voltage
41	Solenoid valve A, B	Transfer shift lever position: 2H	1 V
		Transfer shift lever position: Other than 2H	System voltage
42	Earth	At all times	0 V
43	2WD switch	Transfer shift lever position: 2H	0 V
		Transfer shift lever position: Other than 2H	10.5 V
44	2WD/4WD switch	Transfer shift lever position: 2H or 4H	0 V
		Transfer shift lever position: 4HLc or 4LLc	10.5 V
45	4H switch	Transfer shift lever position: 4H or 4HLc	0 V
		Transfer shift lever position: 2H or 4LLc	10.5 V
46	Center differential lock switch	Transfer shift lever position: 4HLc or 4LLc	0 V
		Transfer shift lever position: 2H or 4H	10.5 V
47	4HLc switch	Transfer shift lever position: 4LLc	0 V
		Transfer shift lever position: Other than 4LLc	10.5 V
50	Freewheel engage switch	Transfer position: 2WD	10.5 V
		Transfer position: 4WD	0 V

TROUBLESHOOTING <SHIFT LOCK AND KEY INTERLOCK MECHANISMS>

DIAGNOSIS FUNCTION

Input signal check procedure

Connect the MUT-II or a voltage meter to the diagnosis connector, and check the inhibitor switch (reverse) input signal.
(Refer to GROUP 00 - Guide to Troubleshooting and Inspection Procedures.)

INSPECTION CHART CLASSIFIED BY TROUBLE SYMPTOMS

Trouble Symptom	Inspection procedure No.	Reference page
When the ignition switch is at a position other than the LOCK position, the selector lever can be moved from the P to the R position even though the brake pedal is not depressed.	1	23-92
When the ignition switch is at a position other than the LOCK position, the selector lever cannot be moved from the P to the R position even though the brake pedal is being depressed.	2	23-92
The ignition switch is at the LOCK position, but the selector lever can be moved from the P to the R position when the brake pedal is depressed.	3	23-93
The selector lever cannot be easily moved from the P to the R position.	4	23-93
The selector lever cannot be moved from the R to the P position.	5	23-93
The ignition key cannot be turned to the LOCK position when the selector lever is at the P position.	6	23-93
The ignition key can be turned to the LOCK position even when the selector lever is at a position other than the P position.	7	23-93

INSPECTION PROCEDURES FOR TROUBLE SYMPTOM

Inspection procedure 1

When the ignition switch is at a position other than the LOCK position, the selector lever can be moved from the P to the R position even though the brake pedal is not depressed.	**Probable cause**
The cause is probably a malfunction of the selector lever assembly lock cam or of the shift lock cable unit.	• Malfunction of lock cam • Malfunction of shift lock cable unit

Check by referring to the probable causes.

Inspection procedure 2

When the ignition switch is at a position other than the LOCK position, the selector lever cannot be moved from the P to the R position even though the brake pedal is being depressed.	**Probable cause**
The cause is probably a malfunction of the selector lever assembly, transmission control cable, shift lock cable unit or the ignition key cylinder lock bar.	• Malfunction of selector lever assembly • Malfunction of transmission control cable • Malfunction of shift lock cable unit • Malfunction of lock bar

Check by referring to the probable causes.

Inspection procedure 3

The ignition switch is at the LOCK position, but the selector lever can be moved from the P to the R position when the brake pedal is depressed.	Probable cause
The cause is probably a malfunction of the shift lock cable unit or of the ignition key cylinder lock bar.	● Malfunction of shift lock cable unit ● Malfunction of lock bar

Check by referring to the probable causes.

Inspection procedure 4

The selector lever cannot be easily moved from the P to the R position.	Probable cause
The cause is probably a malfunction of the selector lever assembly, transmission control cable, shift lock cable unit or the ignition key cylinder lock bar.	● Malfunction of selector lever assembly ● Malfunction of transmission control cable ● Malfunction of shift lock cable unit ● Malfunction of lock bar

Check by referring to the probable causes.

Inspection procedure 5

The selector lever cannot be moved from the R to the P position.	Probable cause
The cause is probably a malfunction of the selector lever assembly or of the transmission control cable.	● Malfunction of selector lever assembly ● Malfunction of transmission control cable

Check by referring to the probable causes.

Inspection procedure 6

The ignition key cannot be turned to the LOCK position when the selector lever is at the P position.	Probable cause
The cause is probably a malfunction of the selector lever assembly, shift lock cable unit or the ignition key cylinder lock bar.	● Malfunction of selector lever assembly ● Malfunction of shift lock cable unit ● Malfunction of lock bar

Check by referring to the probable causes.

Inspection procedure 7

The ignition key can be turned to the LOCK position even when the selector lever is at a position other than the P position.	Probable cause
The cause is probably a malfunction of the shift lock cable unit or of the ignition key cylinder lock bar.	● Malfunction of shift lock cable unit ● Malfunction of lock bar

Check by referring to the probable causes.

ON-VEHICLE SERVICE

BASIC ADJUSTMENT PROCEDURES

AUTOMATIC TRANSMISSION FLUID (ATF) CHECK

NOTE
When replacing the transmission with a new one, overhauling the existing transmission, or driving in a harsh condition, the ATF cooler line should always be flushed out and ATF should be replaced with a new one.

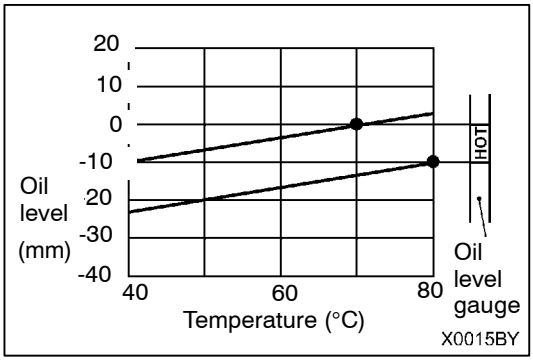

1. Drive the vehicle until the ATF temperature reaches the normal temperature (70 - 80°C).

   NOTE
   1) Measure ATF temperature using MUT-II.
   2) Check the oil level referring to the characteristics chart shown at left if it takes some time to reach the normal operation temperature of ATF (70 - 80°C.)
2. Park the vehicle on a level surface.
3. Move the selector lever to all positions to fully charge the torque converter and the fluid lines with ATF, and then move the selector lever to the “N” position.
4. After wiping away any dirt from around the oil level gauge, pull out the oil level gauge and check the level of ATF.

   NOTE
   If the ATF has a burnt smell, or if it has become very contaminated or dirty, it means that the ATF has become contaminated by minute particles from bushings (metal) or worn parts. In such a case, the transmission needs to be overhauled and the ATF cooler line needs to be flushed out.

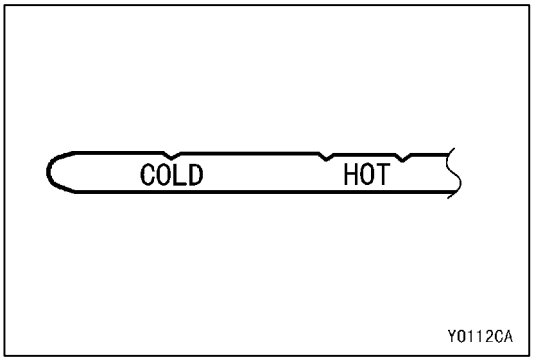

5. Check that the ATF level is between the “HOT” marks on the oil level gauge. If the ATF level is too low, add more ATF until the level reaches between the “HOT” marks.

   Automatic transmission fluid:
   DIA QUEEN ATF SP II M, SP III or equivalent

   NOTE
   If the ATF level is too low, the oil pump draws air into the system along with the ATF, and air bubbles will thus form in the fluid circuit. This will cause a drop in fluid pressure and cause the shift points to change and the clutches and brakes to slip.
   If the ATF level is too high, the gear will churn the ATF and cause bubbles to develop, which can then cause the same problems as when the ATF fluid is too low. In either case, the air bubbles can cause overheating and oxidation of the ATF, and also prevent the valves, clutches and brakes from operating normally. In addition, if bubbles develop in the ATF, the ATF can overflow from the transmission vent holes and be mistaken for leaks.
6. Securely re-insert the oil level gauge.

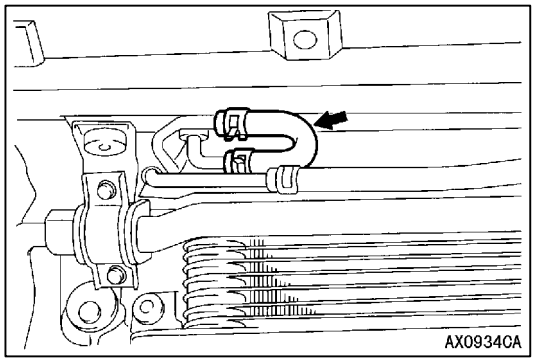

AUTOMATIC TRANSMISSION FLUID (ATF) REPLACEMENT

NOTE
Before replacing the transmission with a new one, overhauling the existing transmission, or connecting the cooler pipe to the transmission, the ATF cooler line should always be flushed out.
If you have an ATF changer, use the ATF changer to flush the ATF. If you do not have an ATF changer, follow the procedure given below.

1. Remove the hose shown in the illustration which allows the ATF to flow from the ATF cooler (built into the radiator) to the transmission.
2. Start the engine and discharge the ATF.
   Driving conditions: N range, idling

   NOTE
   The engine should be stopped within one minute of it being started. If the ATF has all been discharged before this, stop the engine at that point.
   Discharge amount: Approx. 4.0 L

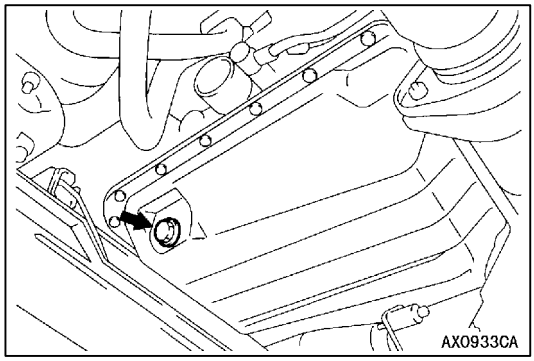

3. Remove the drain plug at the bottom of the transmission case to drain out the remaining ATF.

   Discharge amount: Approx. 2.0 L
4. Install the drain plug with a gasket in between, and tighten it to the specified torque.

   Tightening torque: 32 ± 2 N·m
5. Pour in new ATF through the oil filler tube.

   Amount to add: Approx. 6.0 L

   NOTE
   Stop pouring in the ATF once 6.0 litre has been poured in.
6. Repeat the operation in step 2.

   NOTE
   Carry out steps 2 and 6 so that at least 8.0 litre has been discharged from the cooler hose. After this, discharge a small quantity of ATF and check for contamination. If the ATF is contaminated, repeat steps 5 and 6.
7. Pour in new ATF through the oil filler tube.

   Amount to add: Approx. 4.0 L

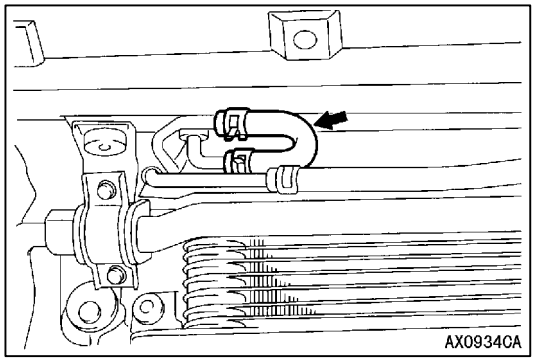

8. Connect the hose which was disconnected in step 1, and then securely re-insert the oil level gauge.
9. Start the engine, and let it run at idle for 1 - 2 minutes.
10. Move the selector lever to all positions once, and then return it to the N position.

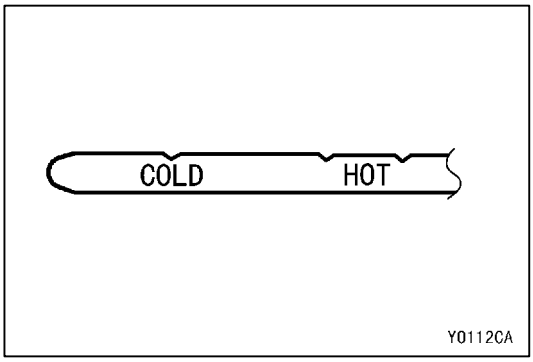

11. Check that the ATF level on the oil level gauge is at the "COLD" mark. If it is not up to this mark, add more ATF.

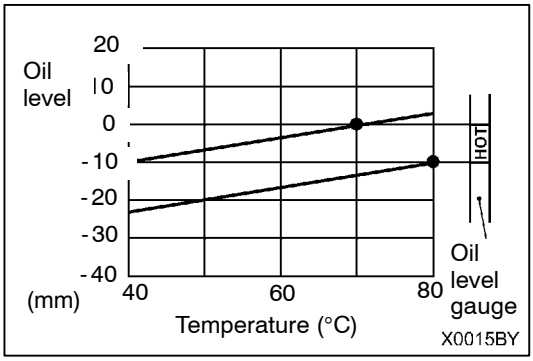

12. Drive the vehicle until the ATF temperature reaches the normal temperature (70 - 80°C), and then re-check the ATF level.
    The ATF level must be between the HOT marks.

    NOTE
    (1) The "COLD" mark is for reference only; the "HOT" marks should be used as the standard for judgment.
    (2) Measure ATF temperature using MUT-II.
    (3) Check the oil level referring to the characteristics chart shown at left if it takes some time until reaching the normal operation temperature of ATF (70 - 80C.)
13. Securely insert the oil level gauge into the oil filler tube.

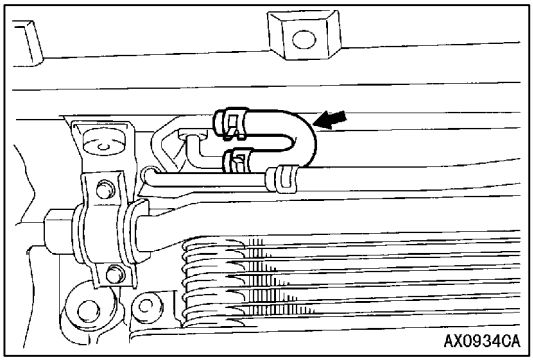

ATF COOLER LINE FLUSHING PROCEDURE

NOTE
If replacing the transmission with a new one, if overhauling the existing transmission, or if the ATF has deteriorated or is contaminated, the ATF cooler line must always be flushed out.

1. Remove the hose shown in the illustration which allows the ATF to flow from the ATF cooler (built into the radiator) to the transmission.
2. Start the engine and discharge the ATF.
   Driving conditions: N range, idling

   NOTE
   The engine should be stopped within one minute of it being started.If the ATF has all been discharged before this, stop the engine at that point.

   Discharge amount: Approx. 4.0 L
3. Pour in new ATF through the oil filler tube.

   Amount to add: Approx. 4.0 L

NOTE
Stop pouring in the ATF once 4.0 litre has been poured in.

4. Repeat the operation in step 2.

NOTE
Carry out steps 2 and 6 so that at least 8.0 L has been discharged from the cooler hose.After this, discharge a small quantity of ATF and check for contamination.If the ATF is contaminated, repeat steps 3 and 4.

5. Carry out the procedure in ”Automatic Transmission Fluid (ATF) Replacement” from step 3 onwards.

ACCELERATOR PEDAL POSITION SENSOR (APS) ADJUSTMENT

Refer to GROUP 13 - On-vehicle Service.

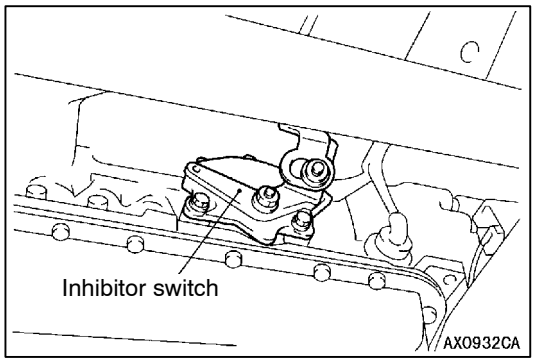

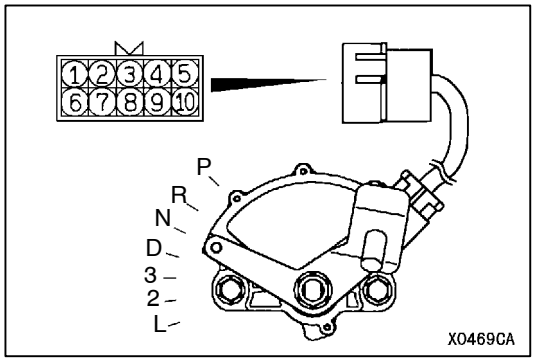

INHIBITOR SWITCH CONTINUITY CHECK

Item	Terminal No.						
	1	2	3	7	8	9	10
P	○			○		○	○
R				○	○		
N		○		○		○	○
D			○	○			

NOTE
The inhibitor switch has 7 positions, but only four positions (P, R, N and D) are used.

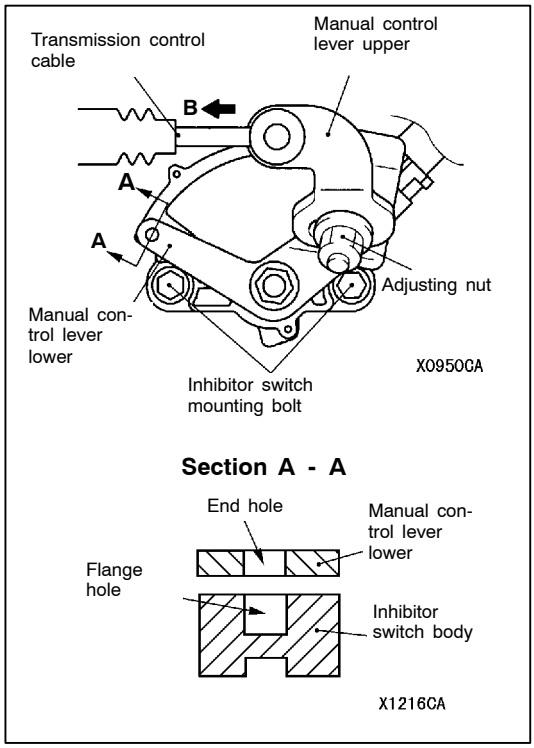

INHIBITOR SWITCH AND CONTROL CABLE ADJUSTMENT

1. Move the selector lever to the N position.
2. Loosen the adjusting nut, and set the manual control lever upper and lower to the free condition.
3. Move the manual control lever lower to the neutral position.
4. Loosen the inhibitor switch body mounting bolt, and then turn the inhibitor switch to adjust so that the hole at the end of the manual control lever lower and the hole in the inhibitor switch body flange (section A - A in the illustration at left) are aligned.
5. Tighten the inhibitor switch body mounting bolt to the specified torque.

   Tightening torque: 11 ± 1 N·m

   NOTE
   Be careful not to let the inhibitor switch body slip out of place.
6. Gently push the transmission control cable in the direction of B as shown in the illustration at left, and tighten the adjusting nut to the specified torque.

   Tightening torque: 24 ± 4 N·m
7. Check that the selector lever is at the “N” position.
8. Check that the transmission shifts to the correct range corresponding to the position of the selector lever, and that it functions correctly in that range.

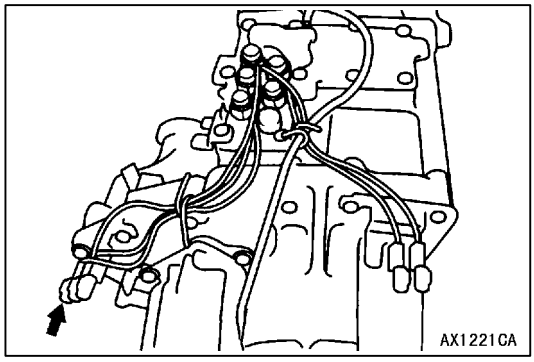

2WD/4WD SWITCH CONTINUITY CHECK

Check the continuity between the terminals of the black connector shown in the illustration at left and the transfer case.

Transfer lever position	Continuity
2H, 4H	Continuity
4HLc, 4LLc	No continuity

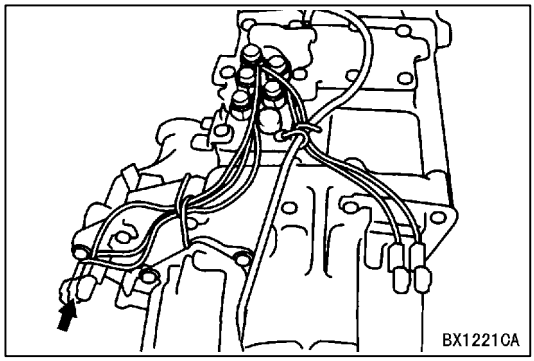

4H SWITCH CONTINUITY CHECK

Check the continuity between the milky-white connector terminals shown in the illustration at left and the transfer case.

Transfer lever position	Continuity
2H, 4LLc	No continuity
4H, 4HLc	Continuity

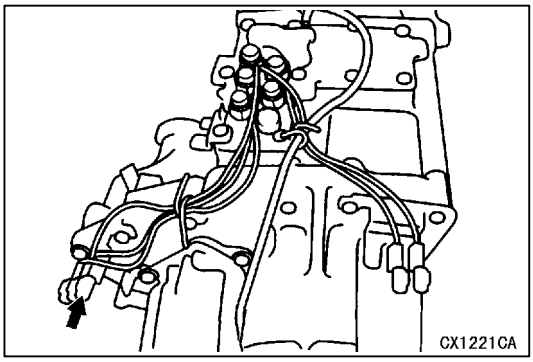

CENTER DIFFERENTIAL LOCK SWITCH CONTINUITY CHECK

Check the continuity between the terminals of the brown connector shown in the illustration at left and the transfer case.

Transfer lever position	Continuity
2H, 4H	No continuity
4HLc, 4LLc	Continuity

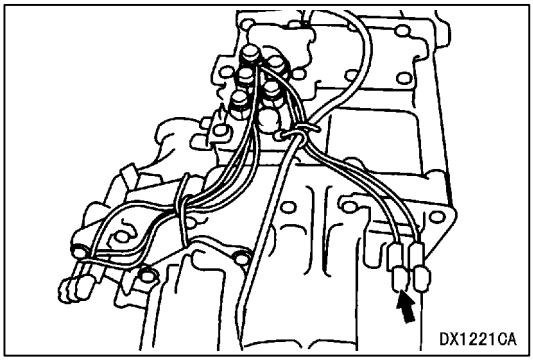

2WD SWITCH CONTINUITY CHECK

Check the continuity between the terminals of the black connector shown in the illustration at left and the transfer case.

Transfer lever position	Continuity
2H	Continuity
4H, 4HLc, 4LLc	No continuity

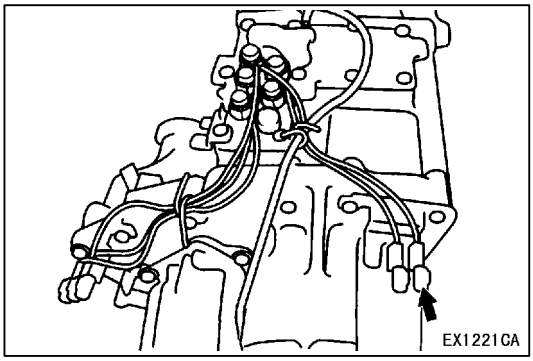

4LLc SWITCH CONTINUITY CHECK

Check the continuity between the terminals of the brown connector shown in the illustration at left and the transfer case.

Transfer lever position	Continuity
4LLc	Continuity
2H, 4H, 4HLc	No continuity

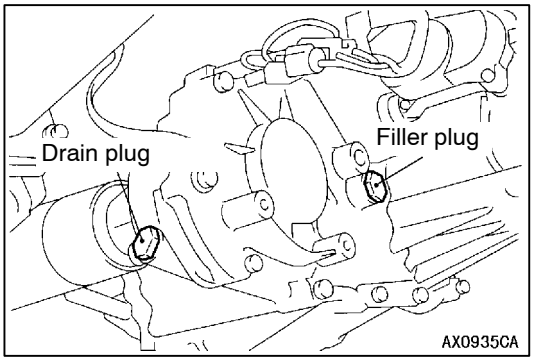

TRANSFER OIL CHECK

1. Remove the oil filler plug.
2. Check that the oil reaches the hole at the bottom of the oil filler plug.
3. Check that the oil is not severely contaminated, and that it has an appropriate level of viscosity.
4. Install the oil filler plug, and tighten it to the specified torque.

   Tightening torque: 32 ± 2 N·m

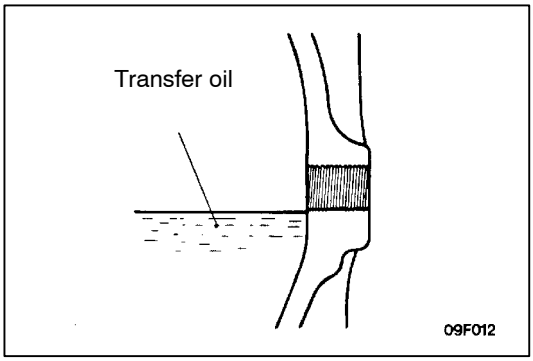

TRANSFER OIL CHANGE

1. Remove the oil drain plug and drain the oil.
2. Install the oil filler plug, and tighten it to the specified torque.

   Tightening torque: 32 ± 2 N·m

3. Remove the oil filler plug, and pour in oil until it reaches the bottom of the oil filler plug.

Specified lubricant:
Hypoid gear oil SAE 75W-90 or 75W-85W conforming to API GL-4

Oil level: 2.8 L

4. Install the oil filler plug, and tighten it to the specified torque.

   Tightening torque: 32 ± 2 N·m

LOCATION OF CONTROL COMPONENTS

Name	Symbol	Name	Symbol
Input shaft speed sensor	O	Freewheel engage switch	N
Output shaft speed sensor	V	Vehicle speed sensor	T
Crank angle sensor <6G7>	B	Stop lamp switch	F
Engine speed sensor <4M4>	D	Shift actuator	S
A/T fluid temperature sensor	U	A/T control solenoid valve assembly	U
Inhibitor switch	P	Diagnosis connector	I
Wide open throttle switch	H	Engine-ECU <4M4>	L
Shift switch (UP, DOWN)	J	A/T-ECU <4M4>	L
Select switch	J	Engine-A/T-ECU <6G7>	L
Dual pressure switch	C	Transfer-ECU	E
Accelerator pedal position sensor (APS)	G	A/T control relay	M
		Center differential lock switch	R
Solenoid valve A, B	A	2WD/4WD switch	R
Transfer lever switch	K	2WD switch	R
Front propeller shaft speed sensor	Q	4H switch	R
Rear propeller shaft speed sensor	W	4LLc switch	R

<6G7>

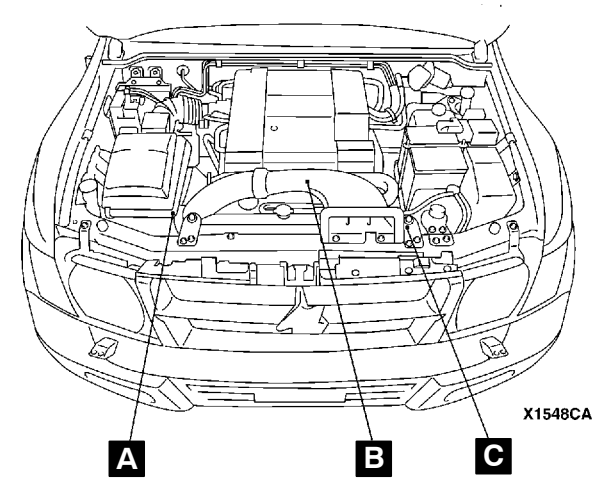

<4M4>

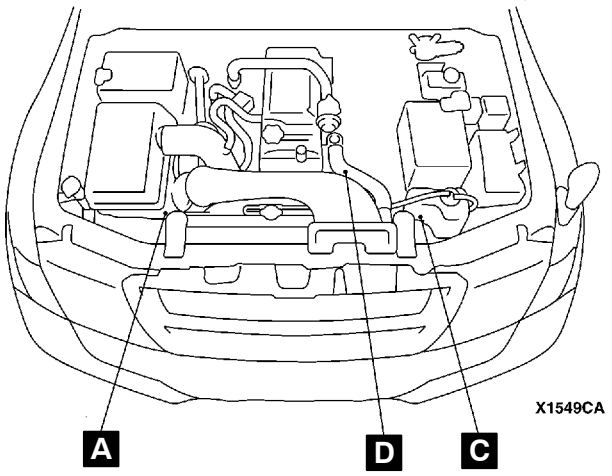

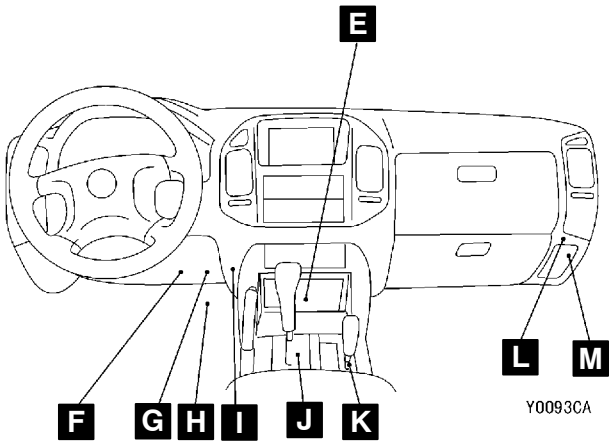

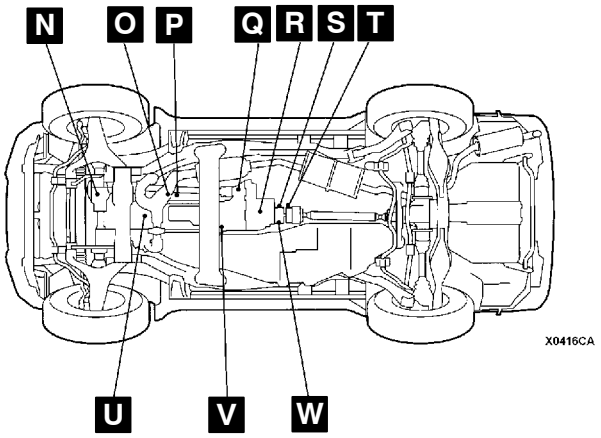

CONTROL COMPONENT CHECKS

CRANK ANGLE SENSOR CHECK <6G7>

Refer to GROUP 13A - Troubleshooting.

ENGINE SPEED SENSOR CHECK <4M4>

Refer to GROUP 13B - Troubleshooting.

ACCELERATOR PEDAL POSITION SENSOR (APS) CHECK

Refer to GROUP 13A - On-vehicle Service.

INHIBITOR SWITCH CONTINUITY CHECK

Refer to P.23-98.

STOP LAMP SWITCH CHECK

Refer to 35A - Brake Pedal.

VEHICLE SPEED SENSOR CHECK

Refer to GROUP 54 - Combination Meter.

DUAL PRESSURE SWITCH CHECK

Refer to GROUP 55A - On-vehicle Service.

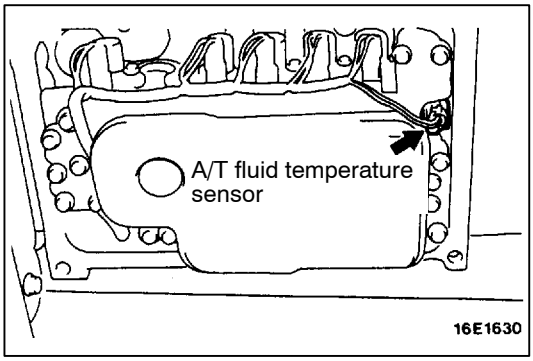

A/T FLUID TEMPERATURE SENSOR CHECK

1. Remove the A/T fluid temperature sensor.

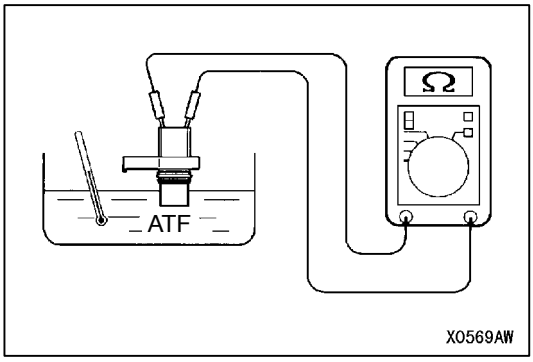

2. Measure the resistance between terminals (1) and (2) of the A/T fluid temperature sensor.

Standard value:

Temperature (°C)	Resistance [kΩ]
0	16.7 - 20.5
20	7.3 - 8.9
40	3.4 - 4.2
60	1.9 - 2.2
80	1.0 - 1.2
100	0.57 - 0.69

NOTE
The N range indicator lamp on the combination meter flashes when the temperature reaches approximately 125°C or higher, and then stops flashing when the temperature drops below approximately 115°C.

3. If the A/T fluid temperature sensor resistance and the temperature when the N range indicator lamp is flashing or switched off are outside the standard value ranges, replace the A/T fluid temperature sensor.

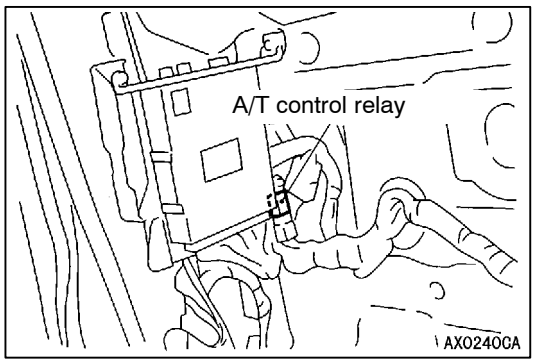

A/T CONTROL RELAY CHECK

1. Remove the A/T control relay.

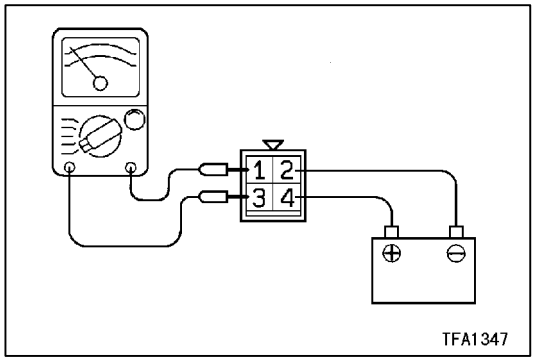

2. Use jumper leads to connect terminal (2) of the A/T control relay to the battery (–) terminal, and terminal (4) to the battery (+) terminal.
3. Check the continuity between terminals (1) and (3) of the A/T control relay while alternately connecting and disconnecting the jumper leads from the battery terminals.

Jumper leads	Continuity between terminals (1) and (3)
Connected	Continuity
Disconnected	No continuity

4. If there is a malfunction, replace the A/T control relay.

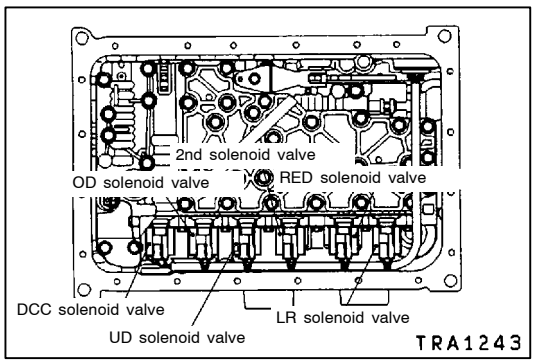

A/T CONTROL SOLENOID VALVE ASSEMBLY CHECK

1. Remove the valve body cover.
2. Disconnect the connectors for each solenoid valve.

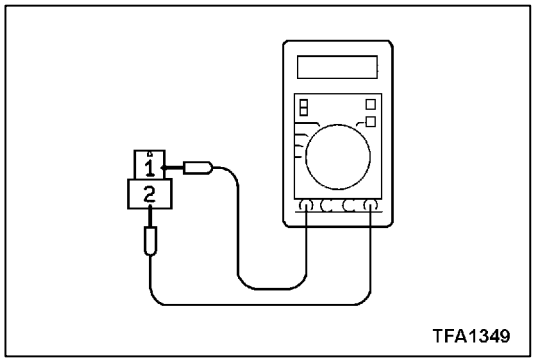

3. Measure the resistances between terminals (1) and (2) of each solenoid valve.

   Standard value:

Name	Resistance value
Damper clutch control (DCC) solenoid valve	2.7 - 3.4 kΩ at 20°C
Low & reverse solenoid valve (LR solenoid valve)	
Second solenoid valve (2ND solenoid valve)	
Underdrive solenoid valve (UD solenoid valve)	
Overdrive solenoid valve (OD solenoid valve)	
Reduction (RED) solenoid valve	

4. If a measurement value is outside the standard value range, replace the solenoid valve.

SELECT SWITCH CHECK

Refer to P.23-119.

SHIFT SWITCH ASSEMBLY CHECK

Refer to P.23-119.

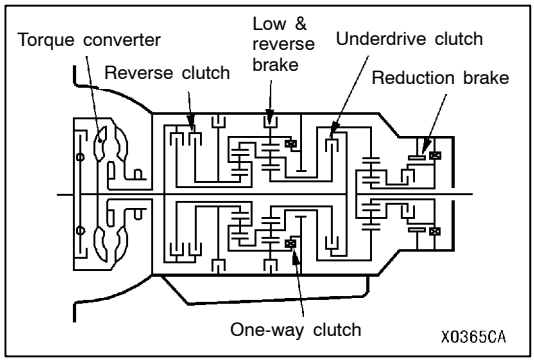

TORQUE CONVERTER STALL TEST

The purpose of this test is to measure the maximum engine speed when the torque converter stalls in D or R ranges in order to check the torque converter operation and the holding performance of the clutches and brakes which are built into the transmission.

NOTE
For safety, the front and rear of the vehicle should be kept clear of other people while this test is being carried out.

1. Check the ATF level, the ATF temperature and the engine coolant temperature.
   - ATF level: “HOT” position on oil level gauge
   - ATF temperature: 70 - 80°C
   - Engine coolant temperature: 80 - 100°C
2. Place wheel locks on both the left and right front wheels.
3. Pull the parking brake lever to apply the parking brake and depress the brake pedal fully.
4. Start the engine.
5. Move the selector lever to the D position, fully depress the accelerator pedal and quickly take a reading of the maximum engine speed at this time.

   Caution
   (1) Do not keep the throttle fully open for any longer than 8 seconds.
   (2) If carrying out the stall test two or more times, move the selector lever to the N position and run the engine at a speed of 1000 r/min to let the ATF cool down before the next test is carried out.

   Standard value - Stalling speed:
   2,200 - 2,700 r/min <6G7>
   2,400 - 2,900 r/min <4M4>

6. Move the selector lever to the R position and repeat the test described above.

   Standard value - Stalling speed:
   2,200 - 2,700 r/min <6G7>
   2,400 - 2,900 r/min <4M4>

Torque converter stall test judgment

1. High stalling speed in both D and R ranges
   - Low line pressure
   - Low & reverse brake slipping
2. High stalling speed in D range only
   - Underdrive clutch slipping
3. High stalling speed in D range only
   - Reverse clutch slipping
   - Reduction brake slipping
4. High stalling speed in both D and R ranges
   - Malfunction of torque converter
   - Poor engine output

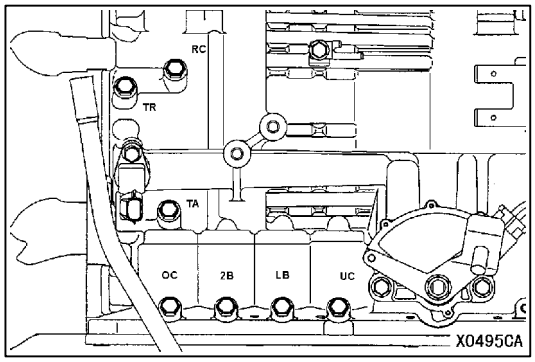

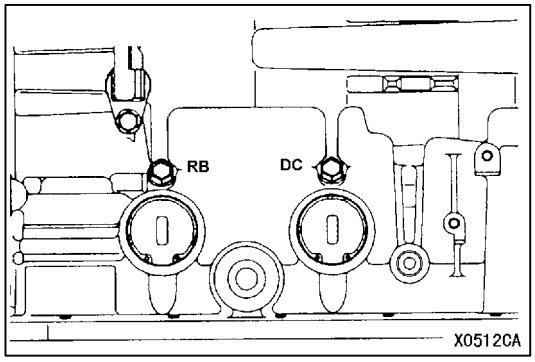

FLUID PRESSURE TEST

1. Let the engine warm up until the ATF temperature is 70 - 80°C.
2. Jack up the vehicle so that the tires can spin freely.
3. Install the special tool (MD998330: 2 992 kPa oil pressure gauge) and the adapters (MD998332,MD998900) to each hydraulic pressure outlet port.
4. Measure the various hydraulic pressures under the conditions given in the standard hydraulic pressure table, and check that the measurements are within the standard value ranges.
5. If the measurements are outside the standard value range, remedy the problem while referring to the hydraulic pressure test diagnosis table.

NOTE
RC : Reverse clutch pressure port
TR : Torque converter pressure port
TA : Damper clutch pressure port
OC : Overdrive clutch pressure port
2B : Second brake pressure port
LB : Low & brake pressure port
UC : Underdrive clutch pressure port
RB : Reduction brake pressure port
DC : Direct clutch pressure port

STANDARD HYDRAULIC PRESSURE TABLE

Measurement conditions			Standard hydraulic pressure kPa							
Selector lever position	Shift range position	Engine speed r/min	Underdrive clutch pressure [UD pressure]	Reverse clutch pressure [RC pressure]	Overdrive clutch pressure [OD pressure]	Direct clutch pressure port [DIR pressure]	Low & brake pressure [LR pressure]	Second brake pressure [2ND pressure]	Reduction brake pressure [RB pressure]	Torque converter pressure [DR pressure]
P	-	2,500	-	-	-	-	260 - 340	-	1,010 - 1,050	500 - 700
R	Reverse	2,500	-	1,270 - 1,770	-	-	1,270 - 1,770	-	1,270 - 1,770	500 - 700
N	-	2,500	-	-	-	-	260 - 340	-	260 - 340	500 - 700
Sports mode	1st	2,500	1,010 - 1,050	-	-	-	1,010 - 1,050	-	1,010 - 1,050	500 - 700
	2nd	2,500	1,010 - 1,050	-	-	-	-	1,010 - 1,050	1,010 - 1,050	500 - 700
	3rd	2,500	784 - 882	-	784 - 882	-	-	-	784 - 882	450 - 650
	4th	2,500	784 - 882	-	784 - 882	784 - 882	-	-	-	-
	5th	2,500	784 - 882	-	784 - 882	784 - 882	-	784 - 882	-	-

HYDRAULIC PRESSURE TEST DIAGNOSIS TABLE

Symptom	Problem location
All hydraulic pressures are too high	Malfunction of regulator valve
All hydraulic pressures are too low	Malfunction of oil pump Blocked oil filter Blocked oil cooler Malfunction of regulator valve Malfunction of relief valve Incorrect valve body installation
Abnormal hydraulic pressure in R range only	Malfunction of regulator valve
Abnormal hydraulic pressure in 3rd or 4th only	Malfunction of regulator valve Malfunction of switch bulb
Abnormal UD pressure only	Malfunction of oil seal K, L, M or Q Malfunction of underdrive solenoid valve Malfunction of underdrive pressure control valve Abnormality with check ball Blocked orifices Incorrect valve body installation
Abnormal REV pressure only	Malfunction of oil seal A, B or C Abnormality with check ball Blocked orifices Incorrect valve body installation
Abnormal OD pressure only	Malfunction of oil seal D, E or F Malfunction of overdrive solenoid valve Malfunction of overdrive pressure control valve Abnormality with check ball Blocked orifices Incorrect valve body installation
Abnormal DIR pressure only	Malfunction of oil seal R, S or T Malfunction of low & reverse solenoid valve (also used for the direct clutch) Malfunction of low & reverse pressure control valve Malfunction of switch bulb Malfunction of fail-safe valve C Blocked orifices Incorrect valve body installation
Abnormal LR pressure only	Malfunction of oil seal I, J or P Malfunction of low & reverse solenoid valve (also used for the direct clutch) Malfunction of low & reverse pressure control valve Malfunction of switch bulb Malfunction of fail-safe valve A Abnormality with check ball Blocked orifices Incorrect valve body installation
Abnormal 2ND pressure only	Malfunction of oil seal G, H or O Malfunction of second solenoid valve Malfunction of second pressure control valve Malfunction of fail-safe valve B Blocked orifices Incorrect valve body installation

Symptom	Problem location
Abnormal RED pressure only	Malfunction of oil seal U or V Malfunction of reaction solenoid valve Malfunction of reduction pressure control valve Blocked orifices Incorrect valve body installation
Abnormal DR pressure only	Blocked oil cooler Malfunction of oil seal N Malfunction of damper clutch control solenoid valve Malfunction of damper clutch control solenoid valve Malfunction of torque converter pressure control valve Blocked orifices Incorrect valve body installation
Pressure applied to non-operating element	Incorrect transmission control cable adjustment Malfunction of manual valve Incorrect valve body installation

Oil seal layout

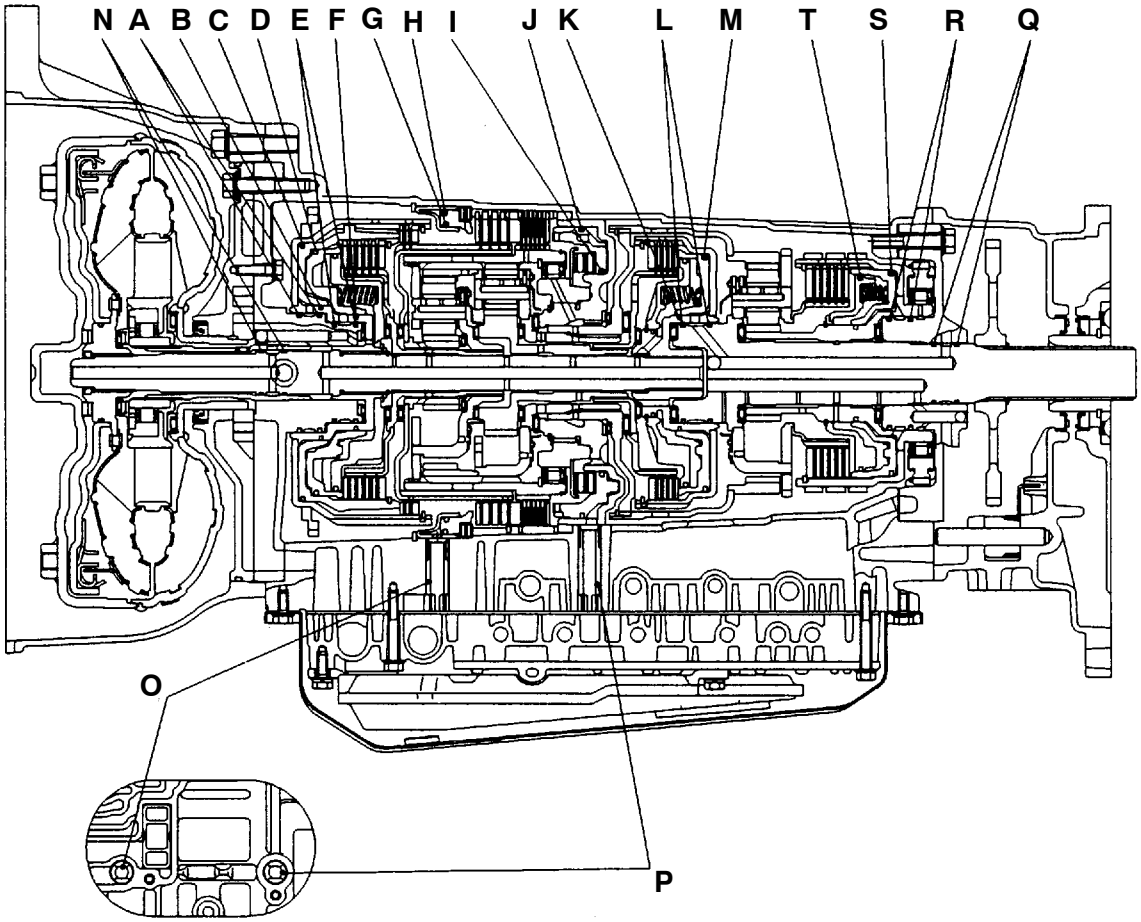

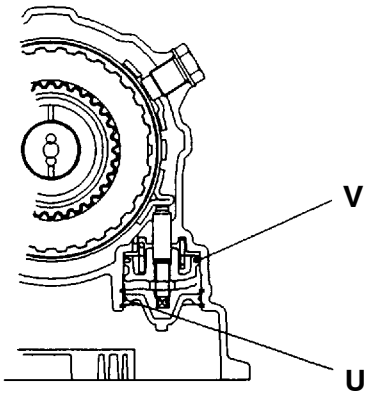

X0514GA

HYDRAULIC CIRCUIT

Parking & Neutral

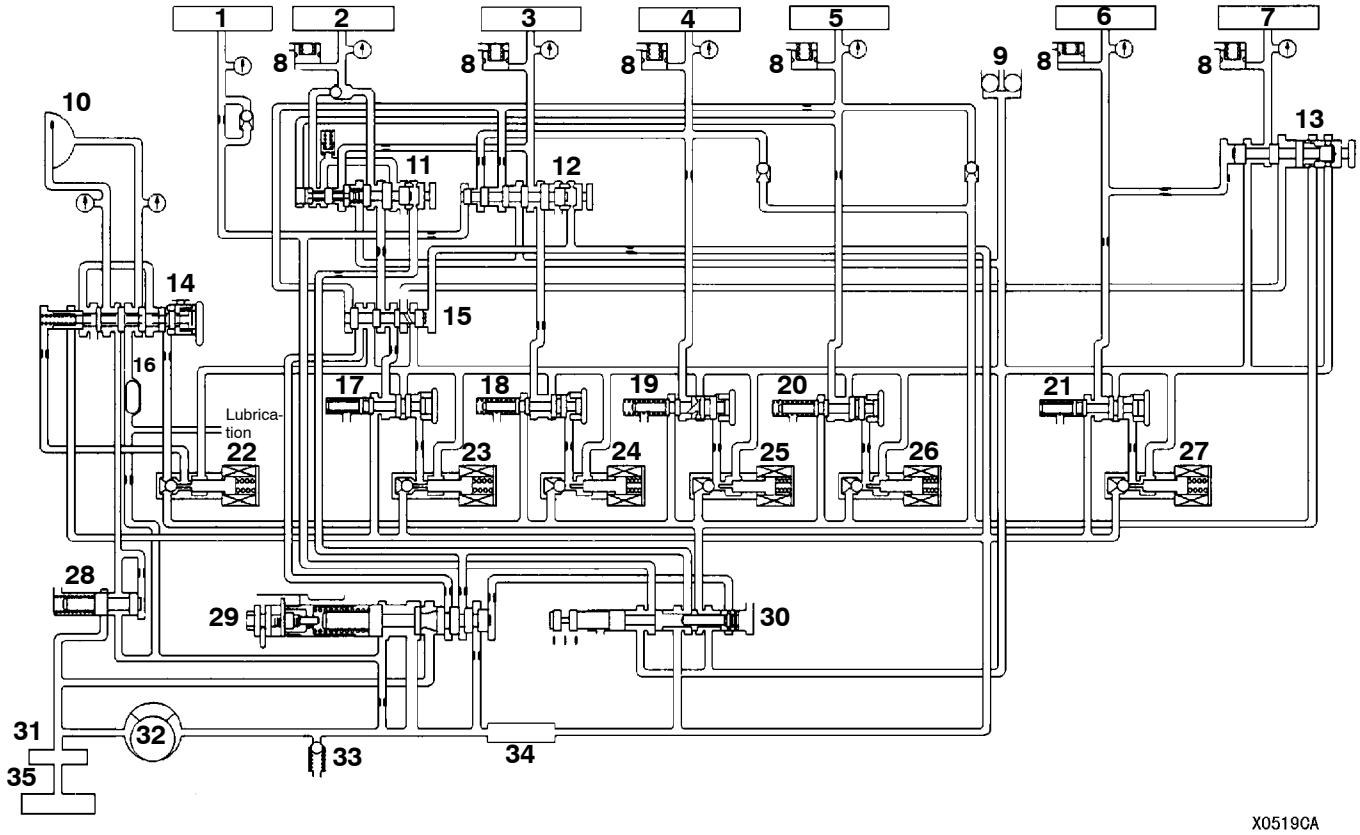

1. Reverse clutch
2. LR brake
3. 2nd brake
4. UD clutch
5. OD clutch
6. RED clutch
7. DIR clutch
8. Accumulator
9. Check ball
10. Damper clutch
11. Fail-safe valve A
12. Fail-safe valve B
13. Fail-safe valve C
14. Damper clutch control solenoid valve
15. Switch bulb
16. Oil cooler
17. LR pressure control valve
18. 2nd pressure control valve
19. UD pressure control valve
20. OD pressure control valve
21. RED pressure control valve
22. DCC solenoid valve
23. LR solenoid valve
24. 2ND solenoid valve
25. UD solenoid valve
26. OD solenoid valve
27. RED solenoid valve
28. Torque converter pressure control valve
29. Regulator valve
30. Manual valve
31. Oil filter
32 Oil pump
33. Relief valve
34. Oil strainer
35. Oil pan

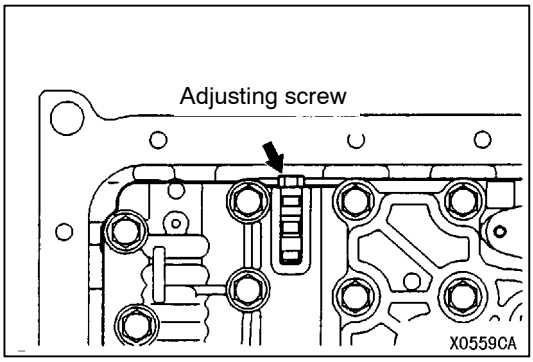

LINE PRESSURE ADJUSTMENT

1. Discharge the ATF, and then remove the valve body cover.
2. Turn the adjusting screw shown in the illustration at left to adjust the UD pressure until it is at the standard value. The pressure increases when the screw is turned anti-clockwise.

   NOTE
   Adjust to the middle of the standard range when the transmission is at the 1st or 2nd gear.

   Standard value: 1,010 - 1,050 kPa

   Change in pressure for a single full turn of the adjusting screw: 35 kPa
3. Install the valve body cover, and then pour in the specified amount of ATF.
4. Carry out a fluid pressure test. (Refer to P.23-106.) Readjust if necessary.

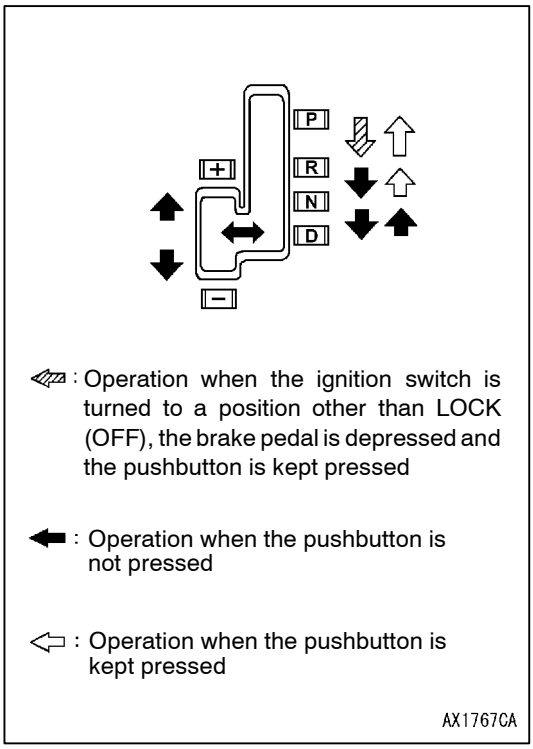

SELECTOR LEVER OPERATION CHECK

1. Apply the parking brake, and check that the selector lever moves smoothly and accurately to each range position.
2. Check that the engine starts when the selector lever is at the N or P position, and that it does not start when the selector lever is in any other position.
3. Start the engine, release the parking brake, and check that the vehicle moves forward when the selector lever is moved from N range to 1st or 2nd gear, and that the vehicle reverses when the selector lever is moved to R range.
4. Stop the engine.
5. Turn the ignition switch to the ON position, and check that the backup lamp illuminates and the buzzer sounds when the selector lever is shifted from P to R range.

   NOTE
   The A/T mis-operation prevention mechanism is provided so that the selector lever cannot be moved from the P position if the ignition switch is at a position other than the LOCK (OFF) position and the brake pedal is not depressed.

KEY INTERLOCK MECHANISM CHECK

1. Carry out the following check.

Inspection procedure	Inspection conditions		Check details (Normal condition)
1	Brake pedal: Depressed	Ignition switch position: LOCK (OFF) or pulled out	The selector lever cannot be moved from the P position to any other position when the pushbutton on the selector lever is not being pressed.
2		Ignition switch position: Other than “LOCK (OFF) or pulled out”	The selector lever can easily be moved from the P position to some other position when the pushbutton on the selector lever is being pressed.
3	Brake pedal: Released	Selector lever position: Other than “P”	The ignition switch will not turn to the LOCK position.
4		Selector lever position: “P”	The ignition switch can turn smoothly to the LOCK (OFF) position.

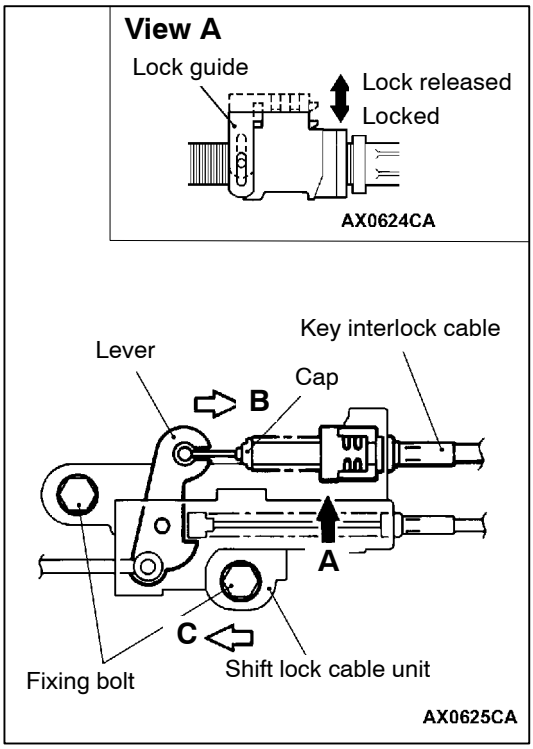

2. If the above operations do not occur correctly, adjust the shift lock cable unit by the following procedure.
   (1) Remove the front floor console, and then provisionally install the selector lever knob. (Refer to GROUP 52A.)
   (2) Move the selector lever to the P position and turn the ignition switch to the LOCK (OFF) position.
   (3) Loosen the shift lock cable unit fixing bolt, and then while pushing the lever in the direction of B and the unit in direction of C, tighten the bolt to the specified torque of 5.0 ± 1.0 N·m.
   (4) Lift the lock guide to unlock the key interlock cable.
   (5) While pushing the cap of the key interlock cable in the direction of B, lower the lock guide to lock the cable.

   NOTE
   The lock position at this time (the amount by which the cap is pushed) represents the amount of adjustment for the key interlock cable. If the key interlock cable does not operate correctly, adjust the lock position.

3. After adjusting, check the operation once more. If the operation is still incorrect, replace the shift lock cable unit. (Refer to P.23-120)

SHIFT LOCK MECHANISM CHECK

1. Carry out the following check.

Inspection procedure	Inspection conditions		Check details (Normal condition)
1	Brake pedal: Depressed	Ignition switch position: ”ACC”	The selector lever cannot be moved from the P position to any other position when the pushbutton on the selector lever is not being pressed.
2			The selector lever can easily be moved from the P position to some other position when the pushbutton on the selector lever is being pressed.
3	Brake pedal: Released		The selector lever can easily be moved from the R position to the P position when the pushbutton on the selector lever is being pressed.

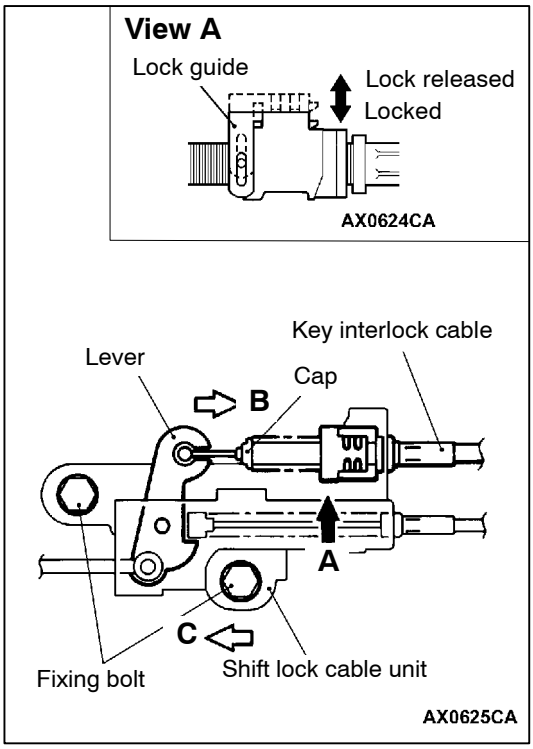

2. If the above operations do not occur correctly, adjust the shift lock cable unit by the following procedure.
   (1) Remove the front floor console, and then provisionally install the selector lever knob.(Refer to GROUP 52A.)
   (2) Move the selector lever to the P position and turn the ignition switch to the LOCK (OFF) position.
   (3) Loosen the shift lock cable unit fixing bolt, and then while pushing the lever in the direction of B and the unit in direction of C, tighten the bolt to the specified torque of 5.0 ± 1.0 N·m.
   (4) Lift the lock guide to unlock the key interlock cable.
   (5) While pushing the cap of the key interlock cable in the direction of B, lower the lock guide to lock the cable.

   NOTE
   The lock position at this time (the amount by which the cap is pushed) represents the amount of adjustment for the key interlock cable. If the key interlock cable does not operate correctly, adjust the lock position.

3. After adjusting, check the operation once more. If the operation is still incorrect, replace the shift lock cable unit. (Refer to P.23-120)

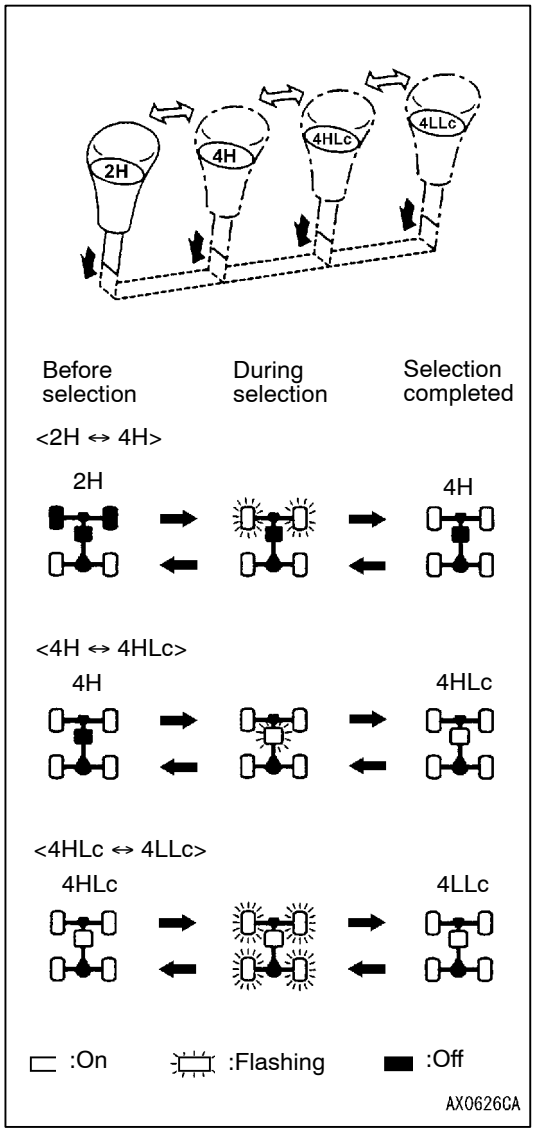

TRANSFER SHIFT LEVER OPERATION CHECK

1. Check that the transfer shift lever moves smoothly and correctly to each transfer position when the lever is pushed downwards and moved.
2. Apply the parking brake, turn the ignition switch to the ON position and move the selector lever to N range.
3. Check that the 4WD indicator lamp illuminates, flashes or switches off according to the pattern shown in the illustration when the transfer shift lever is move to each transfer position.
4. If the selection is not completed even after 5 seconds or more have passed, carry out the following procedure.
   (1) Return the transfer shift lever to the position it was at before selection.
   (2) Start the engine, drive the vehicle straight forward, and then stop the engine.
   (3) Apply the parking brake, and then move the selector lever to the N position.
   (4) Operate the transfer shift lever once more.

   NOTE
   If the vehicle is not fully stopped or if the selector lever is at a position other than N when selecting 4HLc or 4LLc, the 4WD indicator lamp will flash more quickly than normal, and the 4WD range will not be selected. This is a normal phenomenon which serves to control the smooth selection of 4HLc and 4LLc.

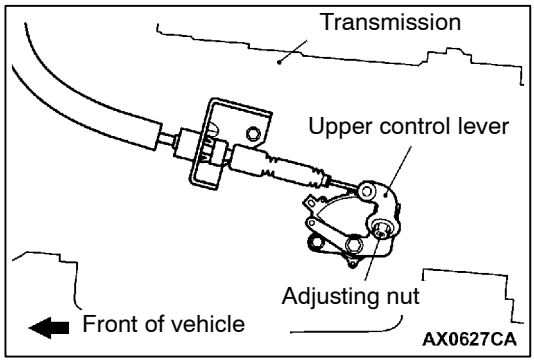

TRANSMISSION CONTROL CABLE ADJUSTMENT

1. Move the selector lever to the N position.
2. Loosen the upper control lever adjusting nut.
3. Check that the inhibitor switch is at N range.
4. Adjust the upper control lever so that there is no slackness or excessive tightness in the transmission control cable, and then tighten the adjusting nut to the specified torque.

   Tightening torque: 24 ± 4 N·m
5. Check that the transmission shifts to the correct range corresponding to the position of the selector lever, and that it functions correctly in that range.

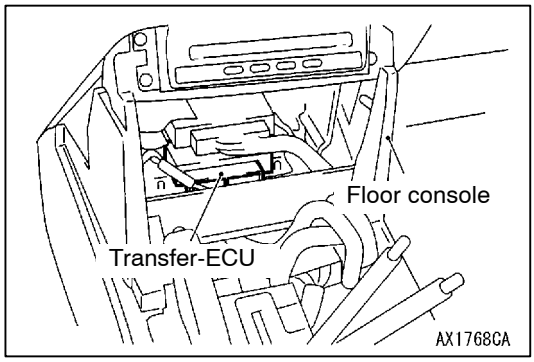

TRANSFER-ECU CHECK

1. Remove the indicator panel and the floor console front panel. (Refer to GROUP 52A - Floor Console.)
2. Measure the transfer-ECU terminal voltage. (Refer to P.23-89.)

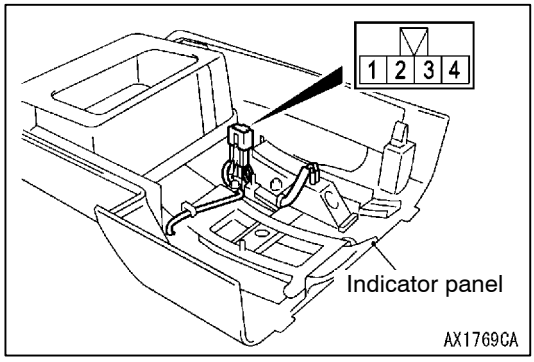

POSITION INDICATOR LAMP CHECK

1. Remove the indicator panel. (Refer to GROUP 52A - Floor Console.)
2. Check that there is continuity between terminals (1) and (2) and between terminals (3) and (4).

TRANSMISSION CONTROL

REMOVAL AND INSTALLATION

NOTE
When removing and installing the transmission control cable and shift lock cable unit, be careful not to hit them against the SRS-ECU.

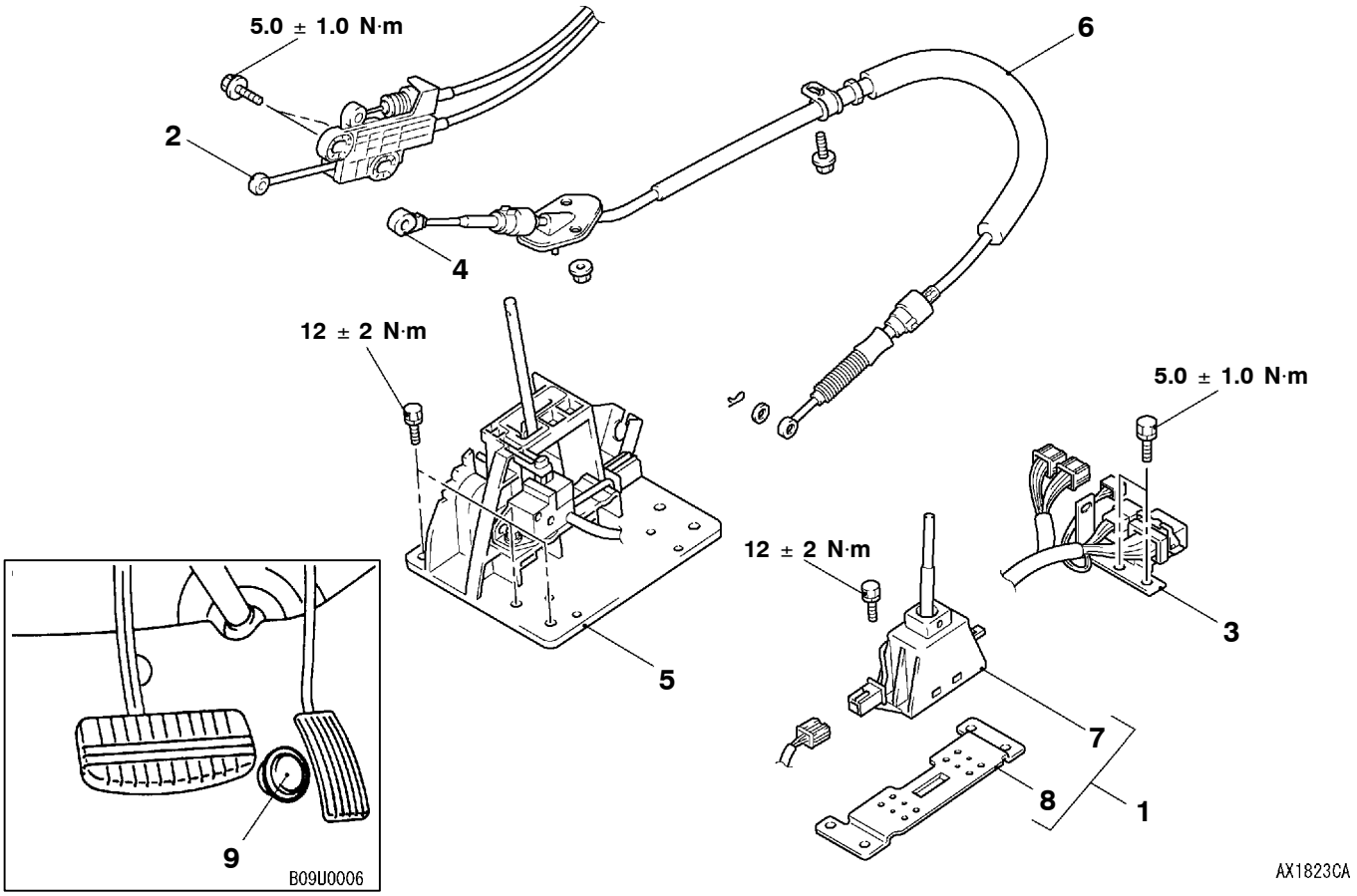

Selector lever assembly and transmission control cable assembly removal steps

- Front floor console (Refer to GROUP 52A.)

1. Transfer shift lever and bracket assembly
2. ▶B◀ Shift lock cable unit connection
3. Transmission control harness connection
4. Transmission control cable connection
5. Selector lever assembly

- Front exhaust pipe (Refer to GROUP 15.)

6. ◀A▶ ▶A◀ Transmission control cable assembly

Transfer shift lever removal steps

- Indicator panel (Refer to GROUP 52A - Floor Console.)

7. Transfer shift lever
8. Bracket

Wide open throttle switch removal step

9. Wide open throttle switch

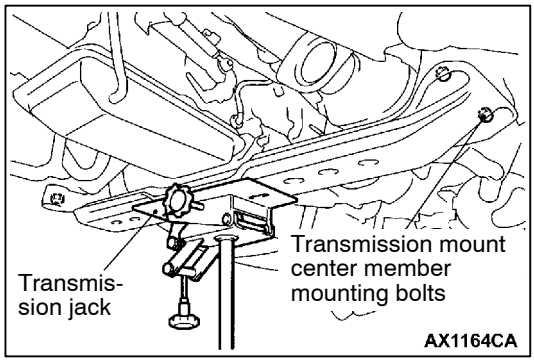

REMOVAL SERVICE POINT

◀A▶ TRANSMISSION CONTROL CABLE ASSEMBLY REMOVAL

1. Support the transmission mount center member with a transmission jack, and then remove the transmission mount center member mounting bolts.
2. Lower the transmission so that there is enough room available to remove the transmission control cable assembly mounting nuts, and then remove the transmission control cable assembly mounting nuts.

INSTALLATION SERVICE POINTS

▶A◀ TRANSMISSION CONTROL CABLE ASSEMBLY INSTALLATION

After installing the transmission control cable assembly, install the transmission mount center member mounting bolts and tighten them to the specified torque of 44 ± 10 N·m.

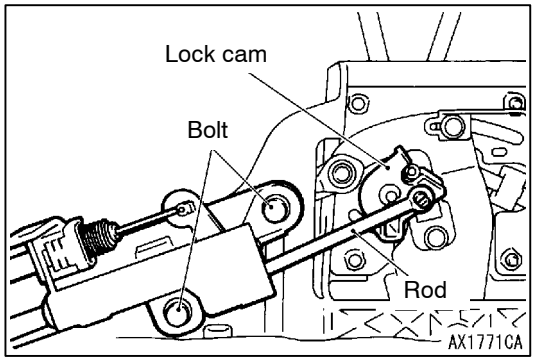

▶B◀ SHIFT LOCK CABLE UNIT INSTALLATION

1. Provisionally install the selector lever knob, and then move the selector lever to the P position and turn the ignition switch to the LOCK (OFF) position.
2. After installing the rod of the shift lock cable unit to the lock cam of the selector lever assembly, install the bolts of the shift lock cable unit.
3. Check the operation of the selector lever assembly. (Refer to P.23-111.)

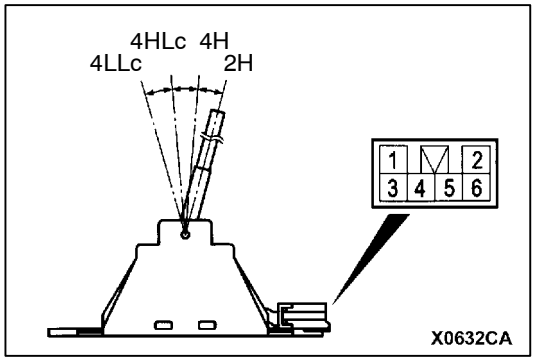

INSPECTION

TRANSFER SHIFT LEVER SWITCH CONTINUITY CHECK

Switch position	Terminal No.				
	1	2	3	4	5
2H	○		○		
4H	○			○	
4HLc	○				○
4LLc	○	○			

SELECTOR LEVER ASSEMBLY
DISASSEMBLY AND REASSEMBLY

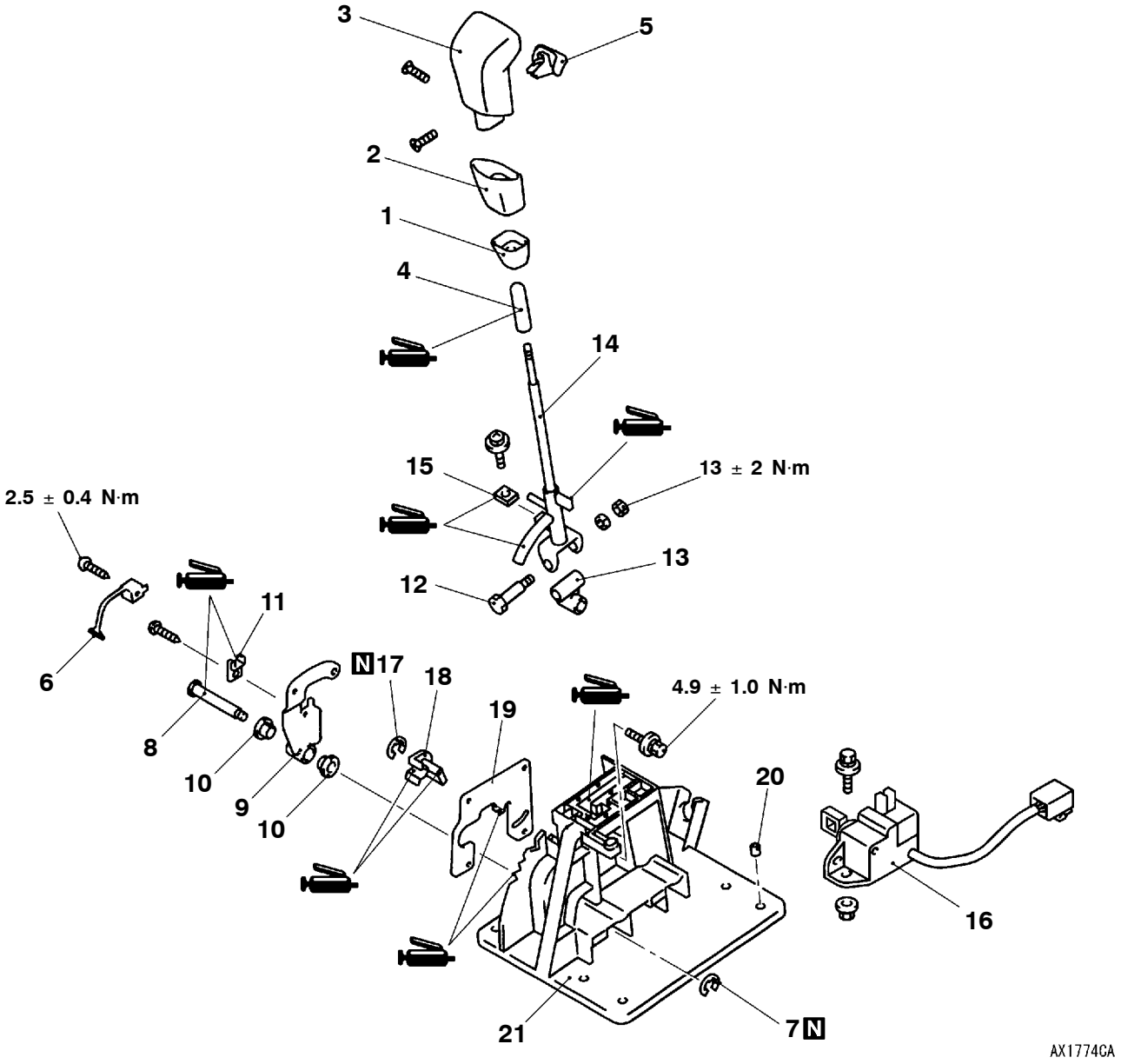

Disassembly steps

1. Knob cover B
2. Knob cover A
3. Shift knob
4. Sleeve
5. Pushbutton
6. Detent spring
7. Snap ring
8. Shaft
9. Arm assembly
10. Bushing
11. Arm cover
12. Bolt
13. Universal joint
14. Lever assembly
15. Stay cover
16. Shift switch assembly
17. Snap ring
18. Malfunction of lock cam
19. Detent plate assembly
20. Collar
21. Base bracket

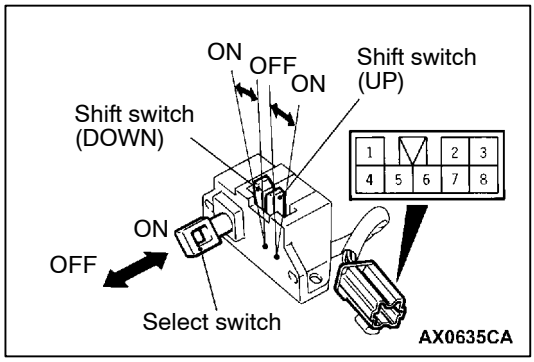

INSPECTION

SHIFT SWITCH ASSEMBLY CONTINUITY CHECK

Switch position		Terminal No.					
		1	3	4	5	7	8
Select switch	ON	○		○			
	OFF	○			○		
Shift switch (UP)	ON		○			○	
	OFF						
Shift switch (DOWN)	ON		○				○
	OFF						

SHIFT LOCK AND KEY INTERLOCK MECHANISMS

REMOVAL AND INSTALLATION

NOTE
When removing and installing the transmission control cable and shift lock cable unit, be careful not to hit them against the SRS-ECU.

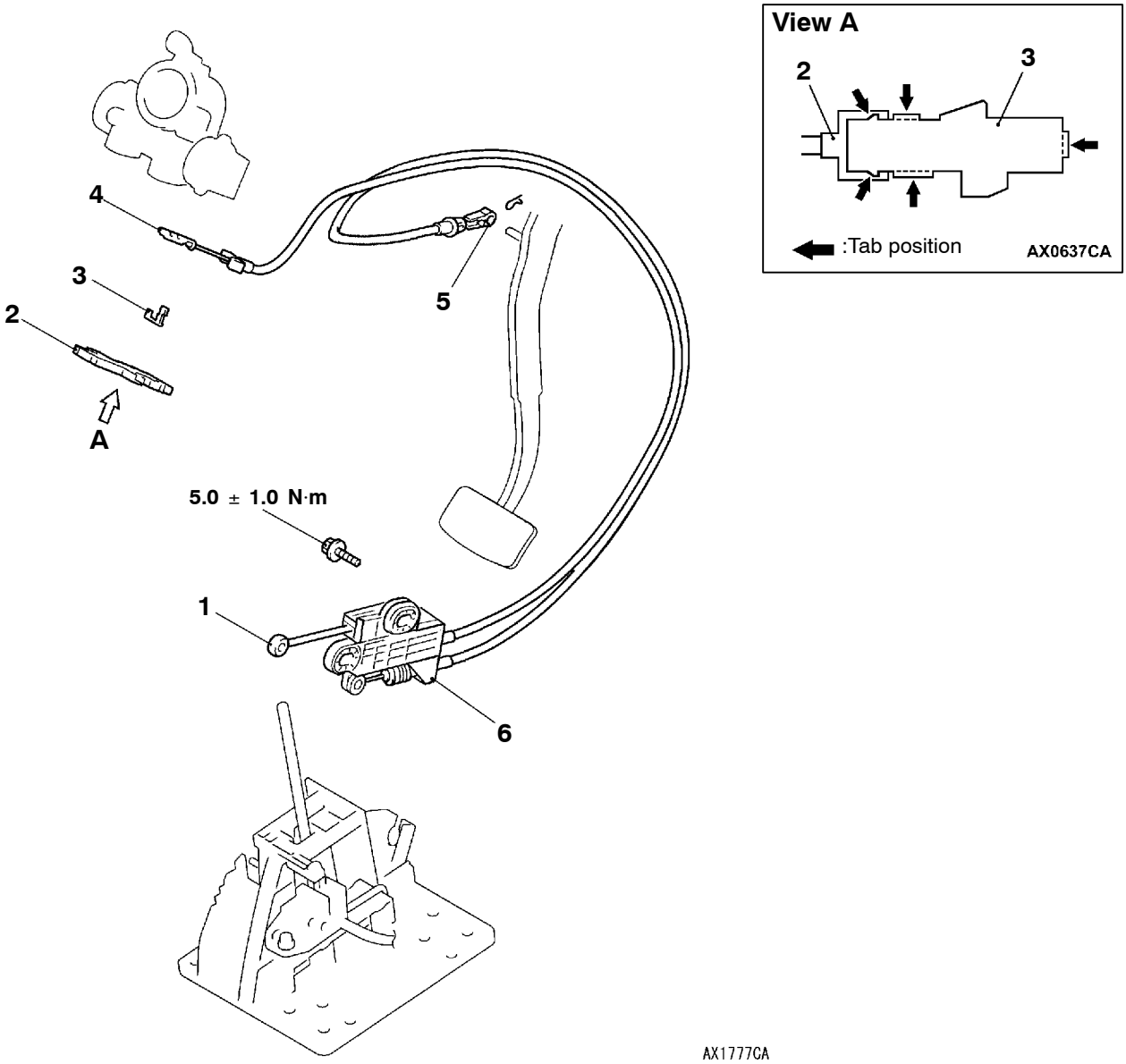

Removal steps

- Front floor console (Refer to GROUP 52A.)
- Switch panel and lower column cover (Refer to GROUP 52A - Instrument Panel.)

▶A◀ 1. Shift lock cable unit connection

◀A▶ 2. Key interlock cable connection
3. Cover
4. Lock bar
5. Shift lock cable connection
6. Shift lock cable unit

REMOVAL SERVICE POINT

◀A▶ KEY INTERLOCK CABLE REMOVAL

Turn the ignition switch to the ACC position, and then pull the key interlock cable out from the ignition key cylinder.

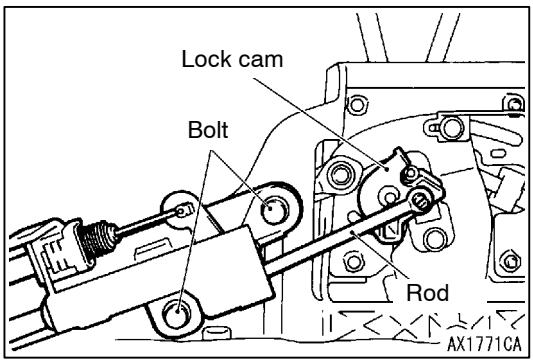

INSTALLATION SERVICE POINT

▶A◀ SHIFT LOCK CABLE UNIT INSTALLATION

1. Provisionally install the selector lever knob, and then move the selector lever to the P position and turn the ignition switch to the LOCK (OFF) position.
2. After installing the rod of the shift lock cable unit to the lock cam of the selector lever assembly, install the bolts of the shift lock cable unit.
3. Check the operation of the selector lever assembly.(Refer to P.23-111.)

TRANSMISSION ASSEMBLY

REMOVAL AND INSTALLATION

NOTE
The rear propeller shaft incorporates a carbon fibre-reinforced plastic tube, so be sure to refer to GROUP 25 during removal.

<6G7>

Pre-removal and Post-installation Operations
- Skid Plate And Under Cover Removal and Installation
- Transmission Fluid and Transfer Oil Draining and Filling (Refer to P.23-95 and P.23-99.)
- Front and Rear Propeller Shaft Removal and Installation (Refer to GROUP 25.)
- Front Exhaust Pipe Removal and Installation (Refer to GROUP 15.)
- Radiator Shroud Lower Cover Removal and Installation (Refer to GROUP 14.)

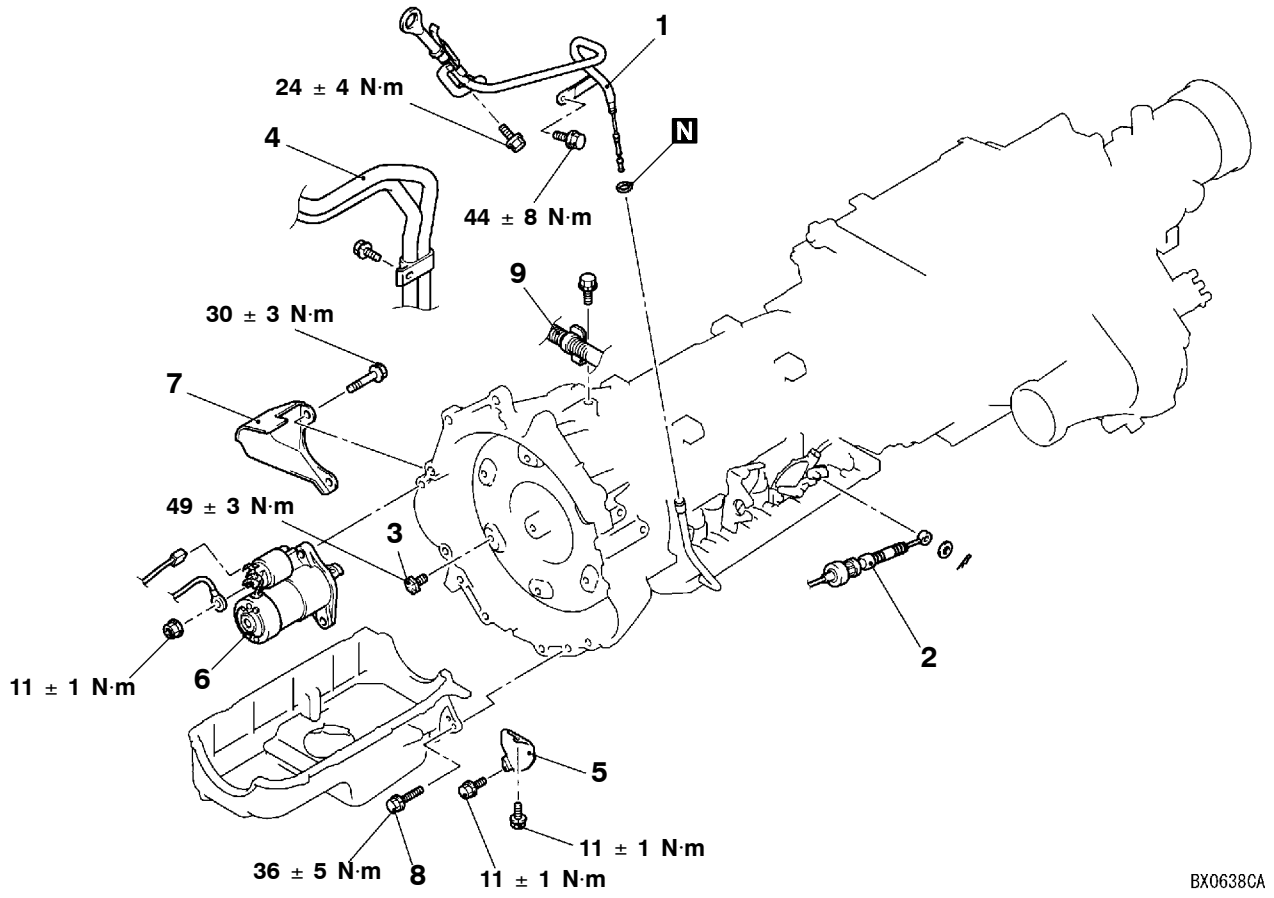

Removal steps

1. Oil level gauge assembly
2. Transmission control cable connection
3. Drive plate connection bolts
4. Heater hose connection
5. Cover
6. Starter motor
7. Starter cover
8. Oil pan connection bolts
9. Battery cable connection

◀A▶

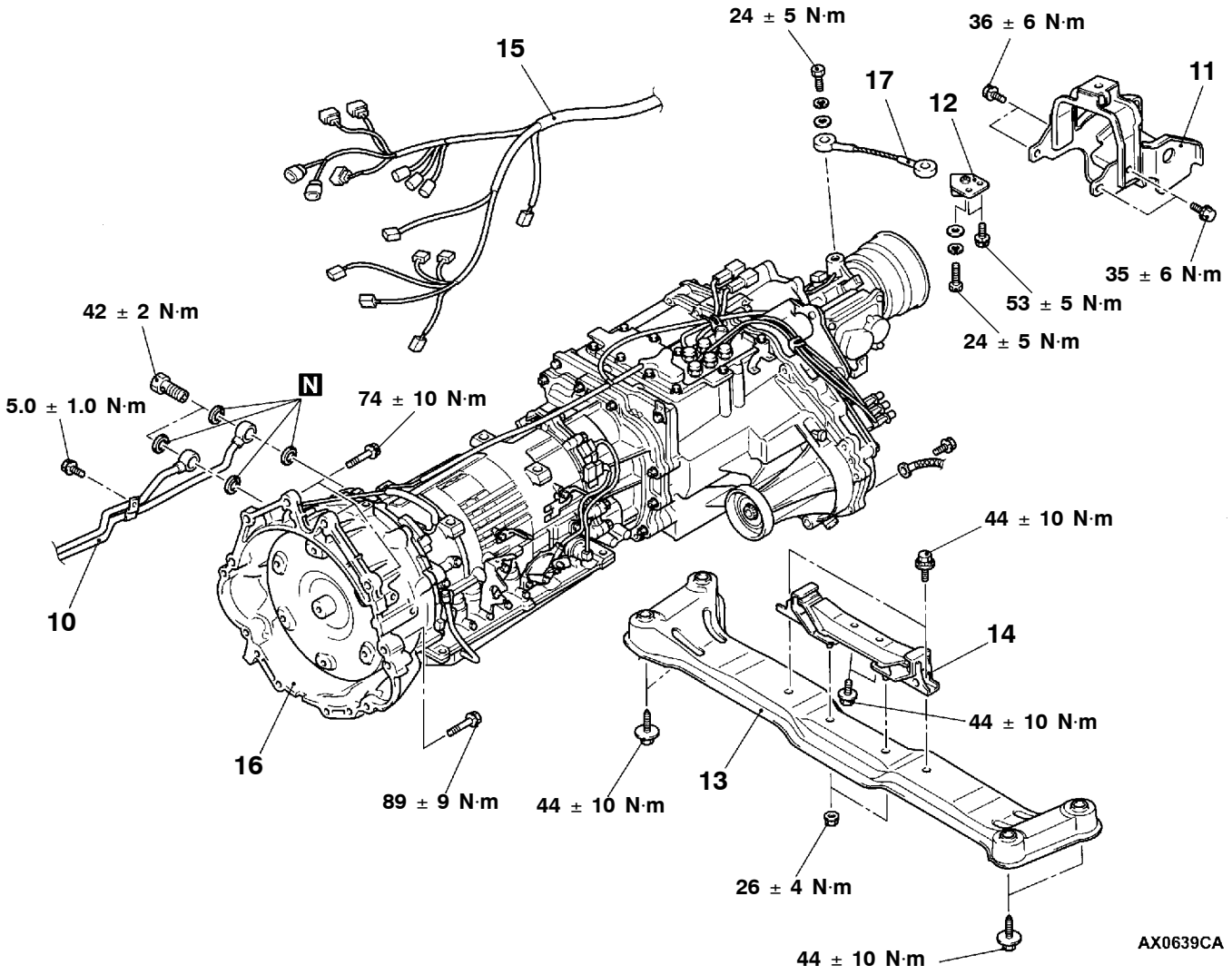

10. Oil cooler tube connection
11. Dynamic damper
12. Tension wire bracket
    - Support the transmission with a transmission jack
13. Transmission mount center member assembly
14. Transmission mount insulator assembly
15. Transmission harness connector connection ◀B▶
16. Transmission assembly ▶A◀
17. Tension wire

<4M4>

Pre-removal and Post-installation Operations
- Skid Plate and Under Cover Removal and Installation
- Transmission Fluid and Transfer Oil Draining and Filling (Refer to P.23-95 and P.23-99.)
- Front and Rear Propeller Shaft Removal and Installation (Refer to GROUP 25.)
- Front Exhaust Pipe and Catalytic Converter Removal and Installation (Refer to GROUP 15.)
- Radiator Shroud Lower Cover Removal and Installation (Refer to GROUP 14.)
- Intercooler Assembly Removal and Installation (Refer to GROUP 15.)

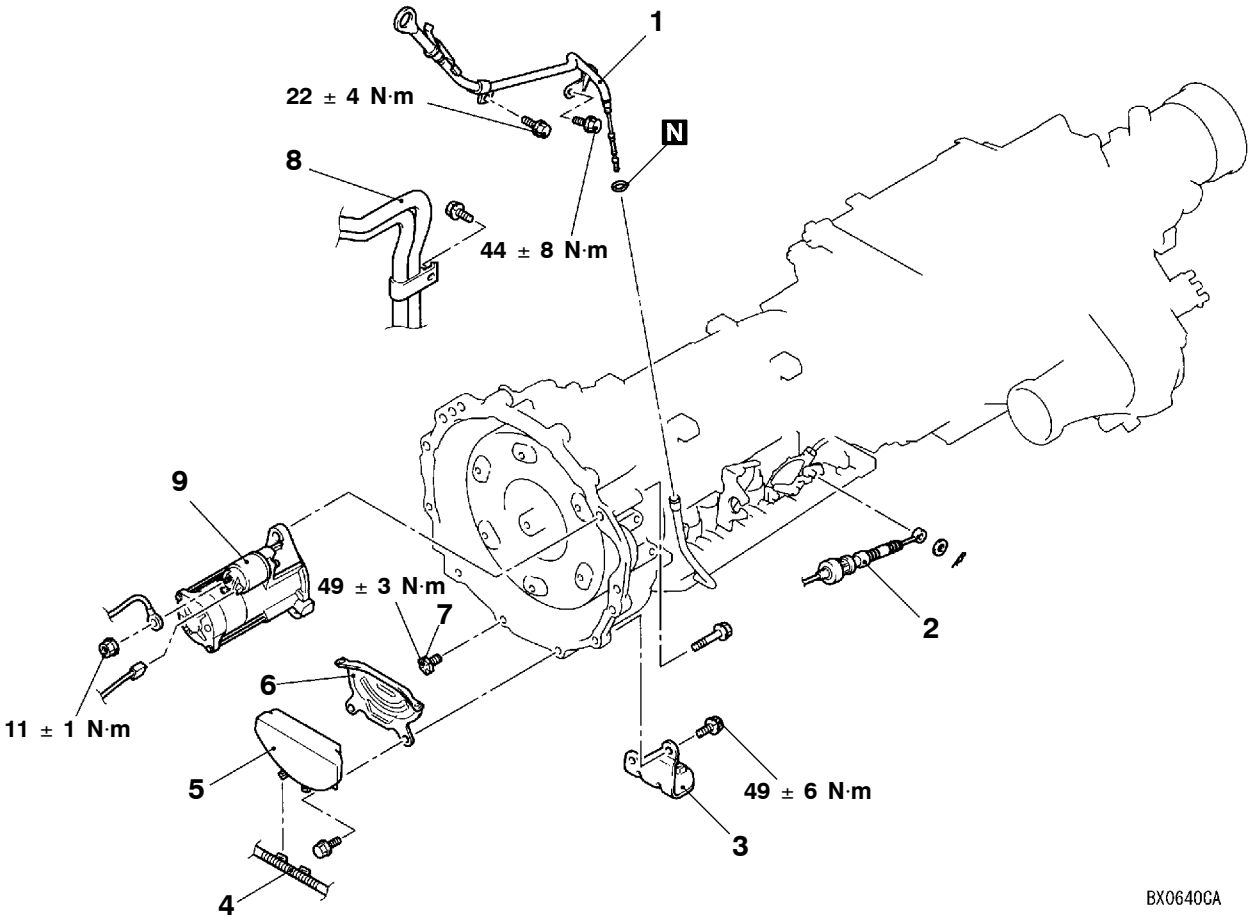

Removal steps

1. Oil level gauge assembly
2. Transmission control cable connection
3. Exhaust support bracket
4. Battery cable connection
5. Spacing rubber

◀A▶

6. Dust cover
7. Drive plate connection bolts
8. Heater hose connection
9. Starter motor

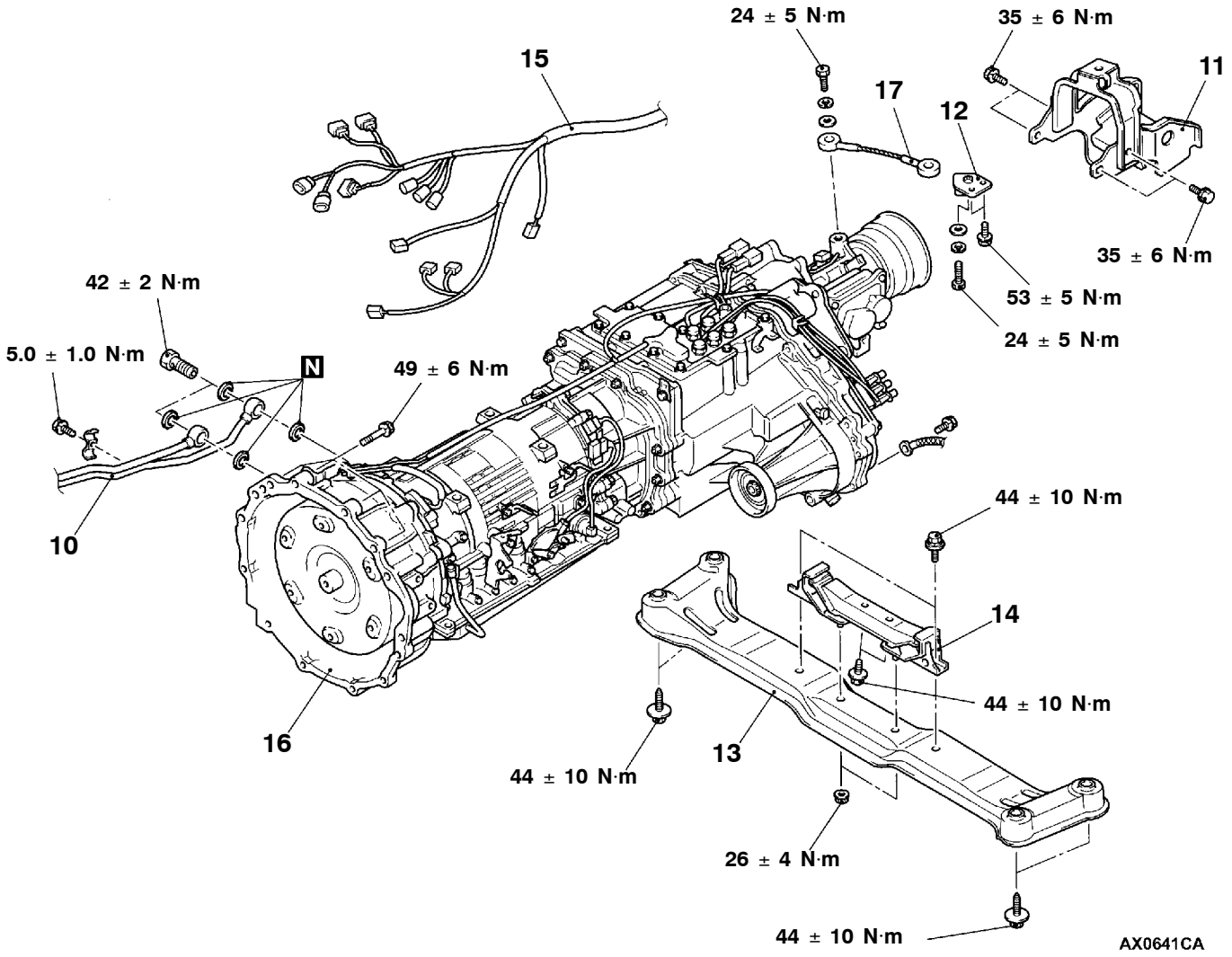

10. Oil cooler tube connection
11. Dynamic damper
12. Tension wire bracket
    - Support the transmission with a transmission jack
13. Transmission mount center member assembly
14. Transmission mount insulator assembly
15. Transmission harness connector connection ◀B▶
16. Transmission assembly ▶A◀
17. Tension wire

REMOVAL SERVICE POINTS

◀A▶ DRIVE PLATE CONNECTION BOLT REMOVAL

1. While turning the crankshaft, remove the six connection bolts.
2. Push the torque converter towards the transmission so that none of it is near the engine.

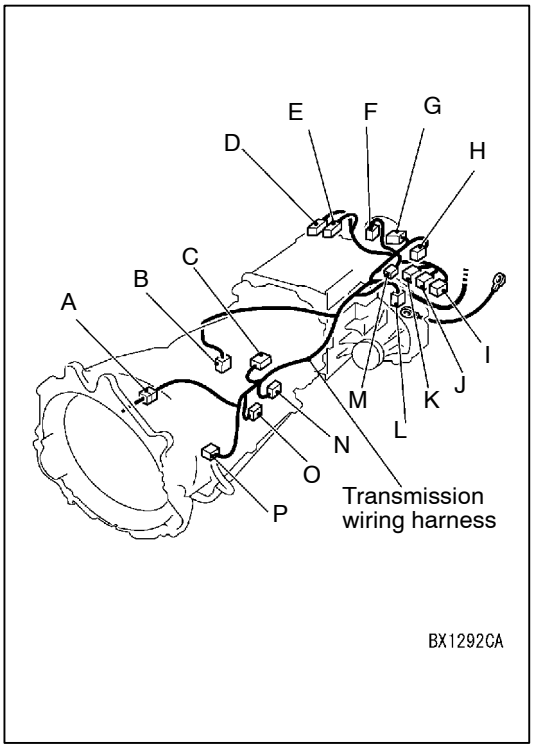

◀B▶ TRANSMISSION HARNESS CONNECTOR DISCONNECTION

1. Lower the transmission to a position where the transmission harness connector can be disconnected, and then disconnect the connector.

Symbol	Connector name
A	Transmission wiring harness and battery wiring harness combination
B	Output shaft speed sensor
C	A/T control solenoid valve assembly
D	4LLc (Direct low range 4WD) switch
E	2WHEY operation detection switch
F	Rear propeller shaft speed sensor
G	Vehicle speed sensor
H	Shift actuator
I	2WHEY/4WD detection switch
J	4H (Full time 4WD) detection switch
K	Center differential lock detection switch
L	Front propeller shaft speed sensor
M	Oxygen sensor (Rear)
N	Inhibitor switch
O	Oxygen sensor (Front)
P	Input shaft speed sensor

2. Place the disconnected transmission harness so that it stays on the vehicle body.

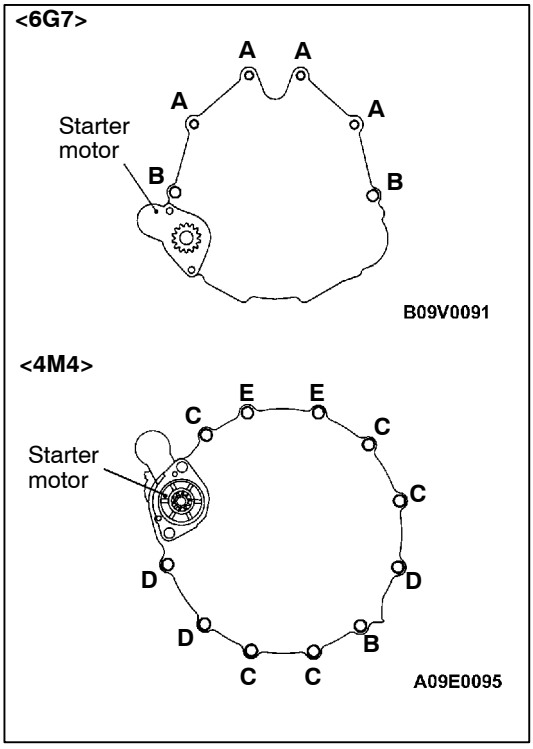

INSTALLATION SERVICE POINTS

▶A◀ TRANSMISSION ASSEMBLY INSTALLATION

The bolt lengths differ according to where they are to be installed, so do not install them in the wrong place.

<6G7>

Bolts	d × l mm
A	12 × 40
B	12 × 55

<4M4>

Bolts	d × l mm
C	10 × 25
D	10 × 45
E	10 × 50

TRANSMISSION OIL COOLER

REMOVAL AND INSTALLATION

Pre-removal and Post-installation Operations
- Transmission Fluid Draining and Filling (Refer to P.23-95 and P.23-99.)
- Skid Plate and Under Cover Removal and Installation

<6G7>

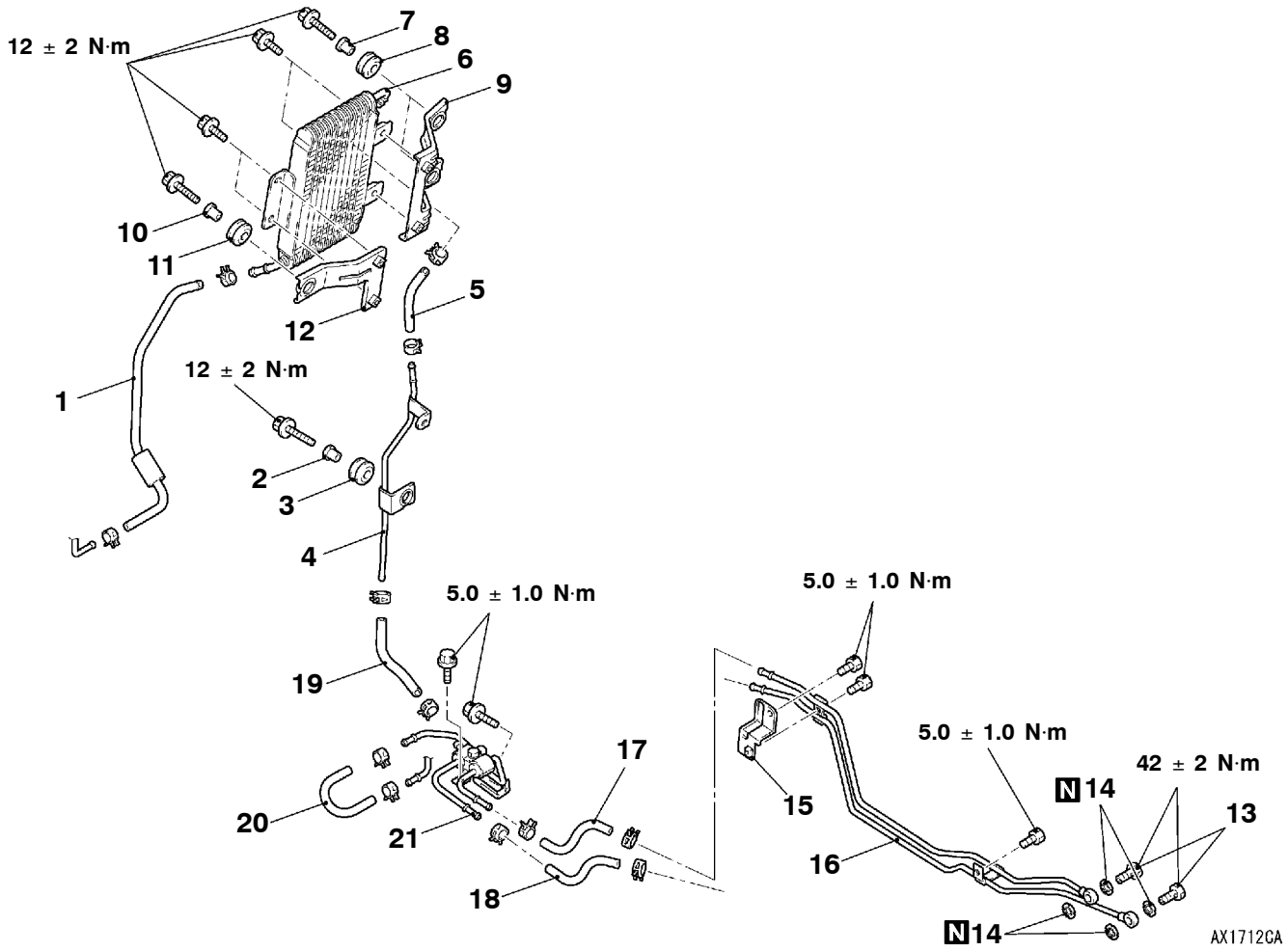

Transmission oil cooler removal steps

1. Hose
2. Distance piece
3. Bushing
4. Transmission oil return tube
5. Hose
6. Distance piece
- Headlight assembly (Refer to GROUP 54A.)

7. Bushing
8. Transmission oil cooler bracket
9. Distance piece
10. Bushing
11. Transmission oil cooler bracket
12. Transmission oil cooler

Transmission oil cooler tube assembly removal steps

▶B◀ 13. Eye bolt
▶B◀ 14. Gasket
15. Transmission oil cooler tube bracket
▶B◀ 16. Transmission oil cooler tube assembly
▶A◀ 17. Return hose
▶A◀ 18. Feed hose
19. Hose
20. Hose
21. Transmission oil cooler tube assembly

<4M4>

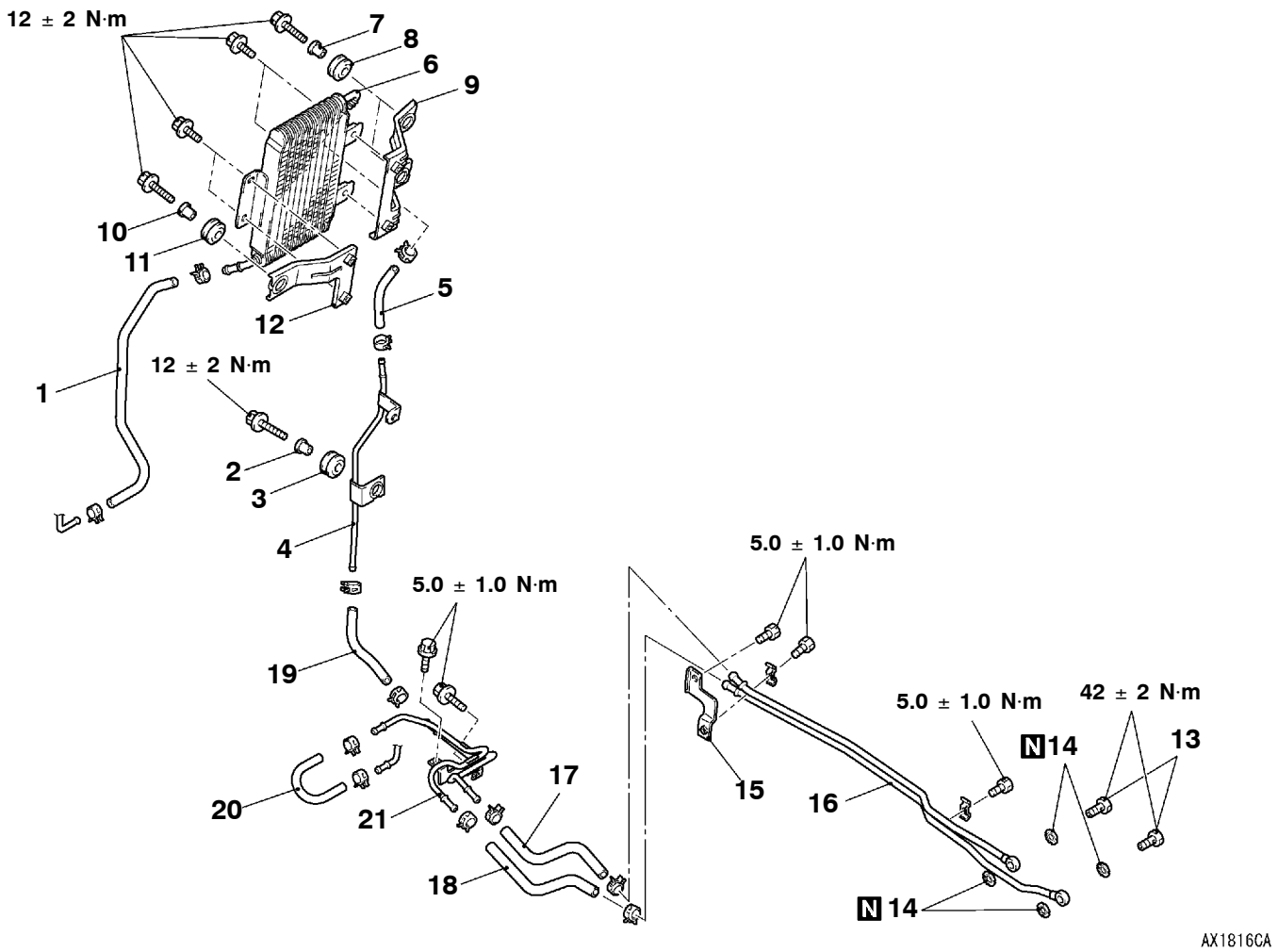

Transmission oil cooler removal steps

1. Hose
2. Distance piece
3. Bushing
4. Transmission oil return tube
5. Hose
6. Distance piece
- Headlight assembly (Refer to GROUP 54A.)

7. Bushing
8. Transmission oil cooler bracket
9. Distance piece
10. Bushing
11. Transmission oil cooler bracket
12. Transmission oil cooler

Transmission oil cooler tube assembly removal steps

▶B◀ 13. Eye bolt
▶B◀ 14. Gasket
15. Transmission oil cooler tube bracket
▶B◀ 16. Transmission oil cooler tube assembly
▶A◀ 17. Return hose
▶A◀ 18. Feed hose
19. Hose
20. Hose
21. Transmission oil cooler tube assembly

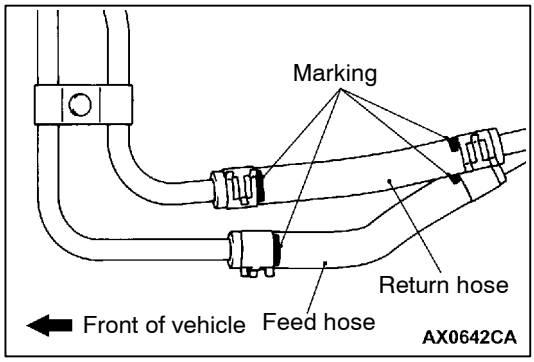

INSTALLATION SERVICE POINTS

▶A◀ FEED HOSE/RETURN HOSE INSTALLATION

Install the feed hose and return hose so that the markings are positioned as shown in the illustration.

▶B◀ TRANSMISSION OIL COOLER TUBE ASSEMBLY/ GASKET/ EYE BOLT INSTALLATION

Provisionally tighten the eye bolts onto the transmission and provisionally secure the pipes with the clamps, and then fully tighten the eye bolts.
Furthermore, tighten the clamps in order starting from the one closest to the transmission.

A/T-ECU

REMOVAL AND INSTALLATION

<6G7> Refer to GROUP 13A - Engine-A/T-ECU; <4M4>Refer to GROUP 13C - Engine-ECU.

INSPECTION

ECU TERMINAL VOLTAGE MEASUREMENT

<6G7>Refer to P.23-64; <4M4>Refer to P.23-66.

TRANSFER-ECU

REMOVAL AND INSTALLATION

Pre-removal and Post-installation Operations
Indicator Panel and Floor Console Front Panel Removal and Installation (Refer to GROUP 52A - Floor Console.)

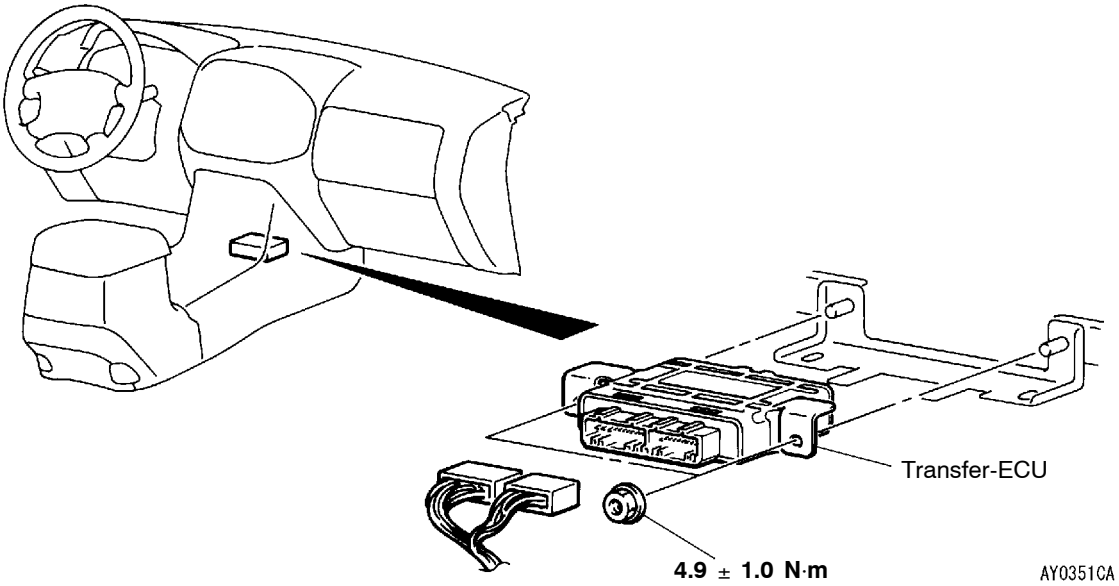

INSPECTION

ECU TERMINAL VOLTAGE MEASUREMENT

Refer to P.23-89.